CabWriter
Cabinet Design Software

CabWriter 2 Default Definitions

The Cabinetmaker's Design, Documentation and Fabrication Tool

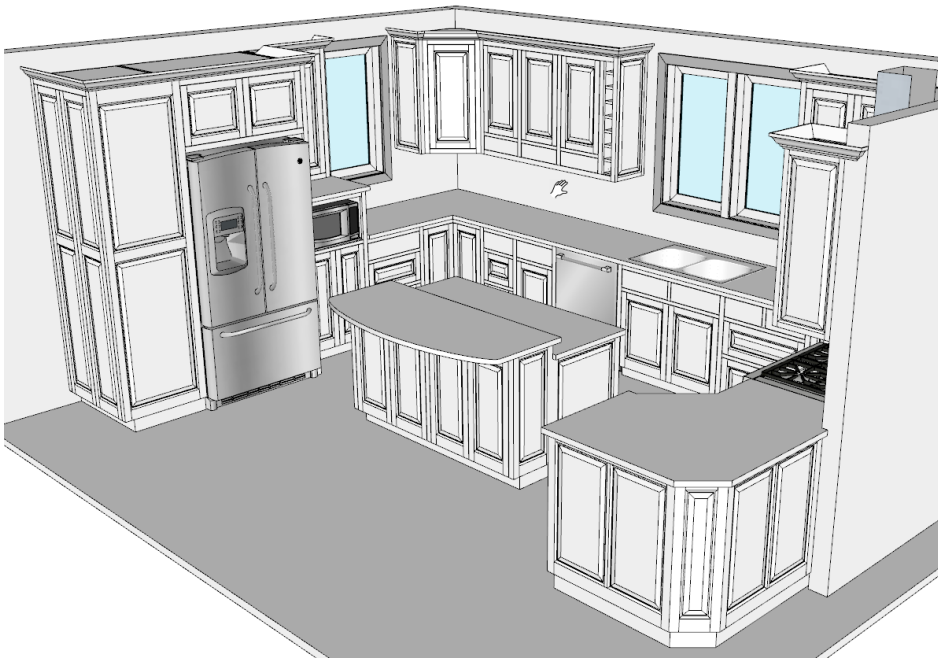

Contents

CabWriter - The Cabinetmaker's Design, Documentation and Fabrication Tool

Appendix A

CabWriter - The Cabinetmaker's Design, Documentation and Fabrication Tool

Parameters

Appendix A provides the definition of each default parameter, by CabWriter Settings dialog box tab. The CabWriter Settings dialog box can be opened using the Edit Project tool . Note that whenever making changes to a CabWriter parameters tab those changes must be saved before they are registered. Changes are saved whenever the user does one of the following: presses the Update button in the lower right, selects another tab or closes the dialog box. The user cannot make changes, and without saving them using one of these three methods, redraw a cabinet with these new defaults and expect the redrawn cabinet to reflect them.

Parameters are saved with the project file (model), thus each model can have its own set of unique parameters. Furthermore, each cabinet can have its own unique set of parameters. When a cabinet is drawn, CabWriter uses the parameters that are currently set in the parameter tabs. The user can change any parameter setting prior to drawing a cabinet, which will cause the cabinet to be drawn with those parameters. This means cabinets in the same model may have different characteristics based on the parameters that were set when it was drawn.

This is a powerful concept in that every cabinet that is drawn in any model essentially becomes part of your personal "library" of cabinets. By clicking on any part of any cabinet and using the Retrieve Cabinet Defaults tool , the user can retrieve the defaults that were used to draw a cabinet which will be then populated in the parameter tabs. From there, the user can choose to draw another cabinet that is exactly the same, or tweak the defaults to draw a slightly different cabinet. If the cabinet to be replicated is in another model, simply copy the cabinet temporarily into the current model, retrieve its parameters, and then proceed to draw more cabinets. Alternatively, in the other model use the Retrieve Cabinet Defaults tool to populate the CabWriter Settings dialog box, then use the Save CabWriter Defaults tool to save the defaults to the user's defaults folder and then they will be available in the current model by using the Open and Load CabWriter Defaults tool .

Project Tab

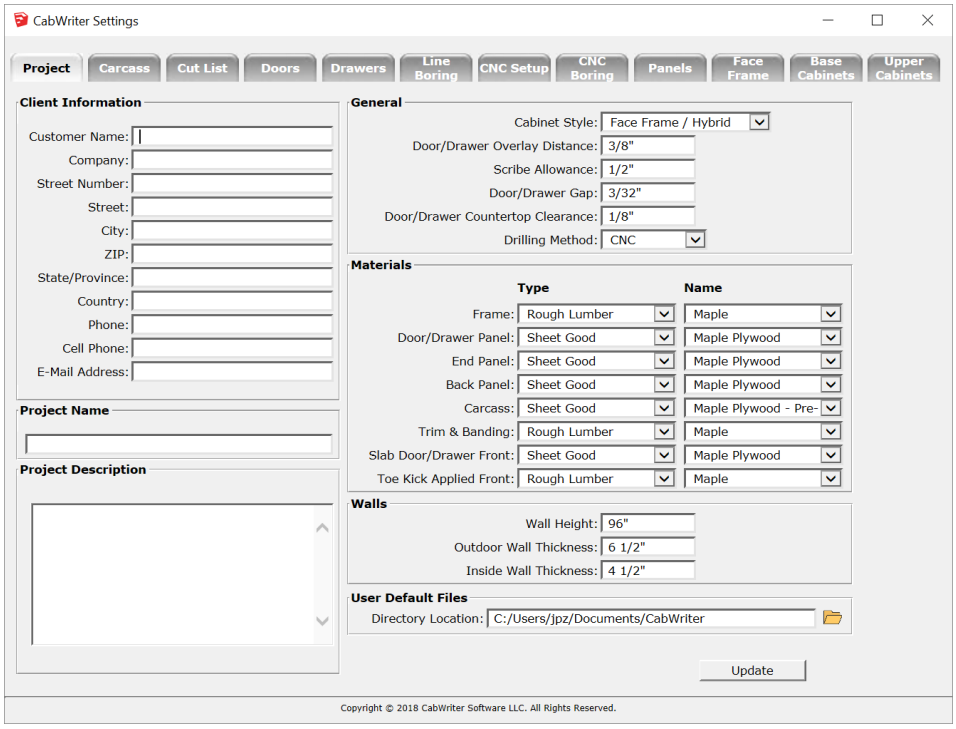

Client Information

The Client Information field is self-explanatory. This field is used to capture all client contact information.

Project Name

The Project Name field is used to give the current CabWriter project a unique name. When a CabWriter project is created the file name is automatically entered in this field.

Project Description

The Project Description field can be used to add any information the user feels necessary to include relative to the design and construction of the current project.

General

The General section is intended to include all non-material defaults that normally apply project wide. However, since every cabinet can have different defaults, the defaults in the General section can also change from one cabinet to another.

Cabinet Style

Cabinet Style is a drop down selection that includes choices Face Frame/Hybrid and Frameless/Hybrid and Overlay. The user should be aware that none of these choices indicates that all defaults are automatically adjusted for the choice made. For example, if the user finished a Face Frame project using the Factory Settings and begins a new project by selecting Frameless/Hybrid, the user must still review all other defaults to be sure they are set up correctly. One such setting that must always be checked on the Face Frame tab is the Base Drawer Front Heights section. If there are any 'red lights' those drawer heights must be corrected. The user is responsible for checking all defaults that pertain to any Cabinet Style choice.

- Face Frame/Hybrid – Choosing Face Frame/Hybrid will set all stile and rail 'Draw?' check boxes on the Face Frame tab. The user can choose to uncheck any or all 'Draw?' check boxes, thereby creating a custom hybrid face frame design.
- Frameless/Hybrid – Choosing Frameless/Hybrid will clear all stile and rail 'Draw?' check boxes on the Face Frame tab. The user can choose to check any or all 'Draw?' check boxes, thereby creating a custom hybrid frameless design.
- Overlay – Choosing Overlay will set and lock all stile and rail 'Draw?' check boxes on the Face Frame tab. The user will be unable to uncheck any of the 'Draw?' check boxes. Overlay is essentially a full face frame design, but the doors are overlaid on the face frame instead of inset.

Door/Drawer Overlay Distance

This default only pertains to the Cabinet Style Overlay. In that event doors and drawer fronts sit on the face of the face frame and extend beyond the opening a distance of Door/Drawer Overlay Distance in all four directions.

Scribe Allowance

Scribe Allowance only applies to End Panels, End Sheets and End Wall Stiles. It is an amount that CabWriter stores in the CutList Bridge DXF attributes for these components. It is stored as the attribute called Resize Width By, which can be seen in the Extended Entity Info dialog box. This means the cut list will show a width for these parts that is a Scribe Allowance larger than nominal size. In the case of an End Panel, the scribe allowance is only applied to the rear stile that meets the wall.

Note: These three types of part should never be cut on a CNC machine because the dimensions used when exporting DXF files are final dimensions which do not include Resize dimensions. As a result the scribe allowance would be lost.

If an end sheet does need to be cut on a CNC, one solution is to use SketchUp's Push/Pull tool to pull the end sheet into the wall by a distance equal to the desired scribe allowance.

Door/Drawer Gap

Door/Drawer Gap applies to three different Cabinet Styles in different ways.

- Face Frame Cabinet Style uses inset doors/drawer fronts. In this case Door/Drawer Gap is the clearance left between a door's or drawer front's edges and the surrounding face frame. The exception is the bottom edge has no gap applied in the case of no bottom rail.
- Overlay Cabinet Style uses doors/drawer fronts that overlay the face frame and hence no gap is applied; in this style this default is meaningless. Instead a Door/Drawer Overlay Distance is applied to enlarge the door beyond the opening.
- Frameless Cabinet Style uses doors/drawer fronts that are in the same face plane that a face frame would occupy, and indeed if any stiles or rails are used in this design style, the doors/drawer fronts would be inset. In this case Door/Drawer Gap is the clearance left between a door's or drawer front's edges and an adjacent door, drawer, cabinet edge or a stile or rail if it's enabled.

Door/Drawer Countertop Clearance

Door/Drawer Countertop Clearance applies only to Frameless designs with no top rail. In this case Door/Drawer Countertop Clearance supersedes Door/Drawer Gap for the top edge.

Drilling Method

Drilling Method is a drop down choice with two options: CNC or Line Boring.

- CNC – When chosen, the defaults on the Line Boring tab are ignored and those on the CNC Boring tab are applicable. This is the choice that should be made if the user intends to cut the cabinet parts on a CNC machine. This choice can also be selected if parts are not going to be cut on a CNC machine, but the user still wants total control of where holes are bored.

  Note: Parts such as End Panels, End Sheets, End Wall Stiles or any other part that requires an oversizing Resize such as scribe allowances should never be cut on a CNC machine because DXF files are based on final dimensions and all oversizing will be lost.

- Line Boring – When chosen the defaults on the CNC Boring tab are ignored and those on the Line Boring tab are applicable. This is the choice that is appropriate for the European 32mm system.

Materials

The Material section is a matrix of drop down choices. The first column of the matrix is Type and there are five choices for material type: Rough Lumber, Dimensioned Lumber, Sheet Good, Primary Material and Secondary Material. The first three falls into a category called Specified Type and the last two falls into a category called Unspecified Type. Unspecified Types can be used to indicate to Bridgewood Design's CutList Plus fx application that the material type is either the Primary Material or Secondary

Material that the user of CutList Plus fx has specified in that application. In other words the material type and name decision is delayed until the user outputs a cut list from CutList Plus fx. Normally a CabWriter User will choose one of the three Specified Types.

The second column of the matrix is the Name and there are numerous choices depending on the choice of Type. The Name column generally is a species name such as Maple or Cherry but can also be an engineered name such as Melamine or MDF.

Commented [JPZ1]: Add a paragraph to explain where in the document the user goes to learn how to change the contents of the materials lists.

The rows of the matrix indicate the type of cabinet part as follows:

Frame

Frame refers to any part in the frame assembly of a frame and panel construction such as end panel frames, face frames, back panel frames, door and drawer front frames. Typically the Type is Rough Lumber and the Name is the name of a hardwood species.

Door/Drawer Panel

This refers to the panel used in the frame and panel construction of a door or drawer front. Its Type is usually either Sheet Good or Rough Lumber and its name is generally a hardwood species name or the name of an engineered material.

End Panel

This refers to the panel used in the frame and panel construction of an end panel. Its Type is usually either Sheet Good or Rough Lumber and its name is generally a hardwood species name or the name of an engineered material.

Back Panel

This refers to the panel used in the frame and panel construction of a back panel. Its Type is usually either Sheet Good or Rough Lumber and its name is generally a hardwood species name or the name of an engineered material.

Carcass

This refers to the material used in the carcass of a cabinet such as sides, top, bottom, shelves, back and stretchers. Its Type is usually Sheet Good and its name is generally a hardwood species name or the name of an engineered material. If the name is a species name of a sheet good pre-finished material is sometimes used.

Note: Toe Kick ribs, stretchers and ties are automatically assigned a material Type of Sheet Good and a name of Shop Plywood. Their material is not affected by Carcass Type or Name choices. The user can override this by manually assigning a different material using the Extended Entity Info dialog box. This automatic choice is made based on the practice by most cabinetmakers of using whatever scrap plywood is stored in the shop for such use.

Trim and Banding

This refers to the front edge of a cabinet's bottom only. In Face Frame Cabinet Style designs without bottom rails the bottom's front edge can be trimmed or banded. The material type is usually Rough Lumber and the Name is usually a hardwood species.

Note: The Trim and Banding default should not be confused with the banding applied to plywood or engineered product edges in general. That is considered a construction process and its thickness can be accounted for CutList Bridge DXF Resize attributes if necessary.

Slab Door/Drawer Front

If Slab is chose for either Drawer Face Style or Door Face Style on either the Drawers or Doors tabs respectively then this default is used to specify the material. The Type is usually a Sheet Good, but could be Rough Lumber, and the Name is generally a species name or an engineered material name.

Toe Kick Applied Front

This refers to the material that finishes the ladder base construction and is visible to the public. The type is usually Rough Lumber or Sheet Good and the Name is usually a species or engineered product name. They are self-explanatory and easily modified with native SketchUp tools.

Walls

The Walls section has three defaults that are used by the Construct Walls tool to create walls.

Wall Height

Wall Height is the typical height of an inside wall.

Outside Wall Thickness

Outside Wall Thickness is the nominal thickness of an outside wall.

Inside Wall Thickness

Inside Wall Thickness is the nominal thickness of an inside wall.

User Default Files

The User Defaults Files section provides the ability for the user to define where user saved CabWriter defaults files are stored.

Directory Location

User saved defaults are stored in a directory specified by the user, which permits installing new versions of CabWriter without losing user saved defaults. CabWriter factory supplied defaults are stored in the following places and cannot be changed by the user:

Plugins\cabwriter\cabwriter_defaults\imperial for Imperial defaults
Plugins\cabwriter\cabwriter_defaults\metric for Metric defaults

The user can specify a directory and save user defines defaults in one of three ways:

1. The input filed will be blank until the user specifies a default directory. To do this click on the folder icon to the right and select a directory using the Select Folder dialog box. This should be done as soon as a CabWriter project is created. But this is not a project only default; it is a CabWriter wide default that will be available from project to project until again changed by the user. So it only has to be specified one time.
2. If the default directory has not yet been specified at the time the user selects the Save CabWriter Defaults tool, the Select Folder dialog box will automatically open and the user can specify the default directory and then save the defaults in it.
3. If the default directory has not yet been specified at the time the user selects the Open and Load CabWriter Defaults tool, the Select Folder dialog box will automatically open and the user can specify the default directory and then choose a file to open.

Carcass Tab

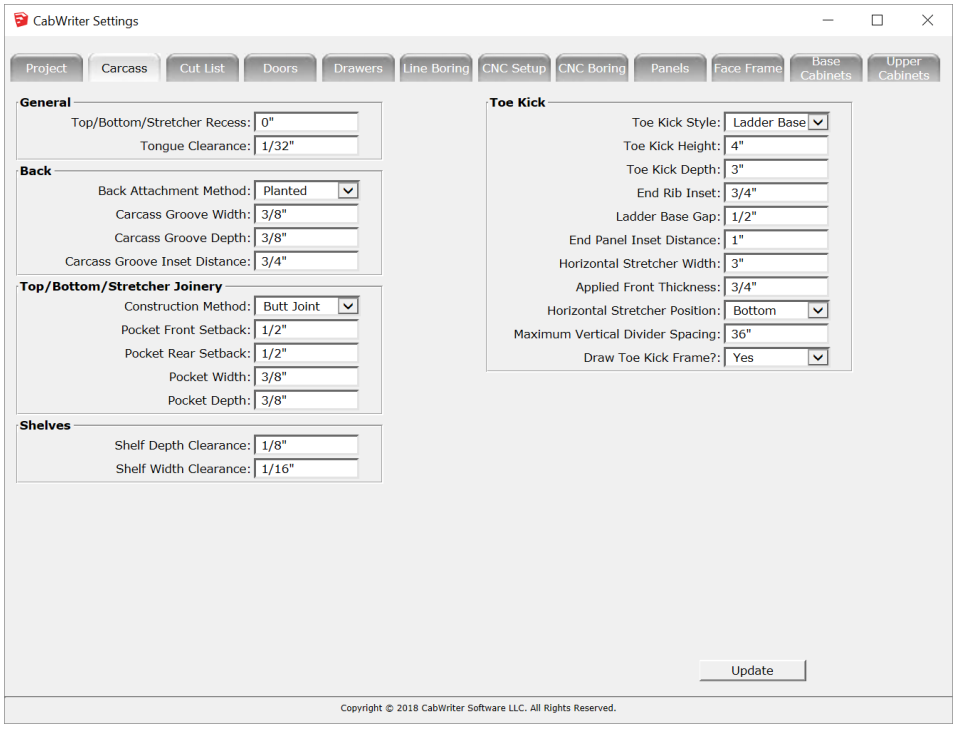

General

The General section has only two defaults: Top/Bottom/Stretcher Recess and Tongue Clearance.

Top/Bottom/Stretcher Recess

The Top/Bottom/Stretcher Recess default permits the recessing of the top, bottom, top stretchers, mid stretchers and any fixed shelves. They are recessed from the front edge of the sides by the amount specified in this default.

Tongue Clearance

Tongue Clearance applies to all tongues resulting from defaults in the Back or Top/Bottom/Stretcher Joinery sections; i.e. applies if an Inset value is chosen for Back Attachment Method or Inset is selected for Construction Method. It is a dimension subtracted from tongues' nominal depth in order to keep them from bottoming out in the groove or pocket.

Back

The Back section includes the defaults necessary to define how the back is attached and secured in a cabinet.

Back Attachment Method

The Back Attachment Method default is a drop down with five choices: Planted, Inset Full, Inset Sides Only, Inset Sides/Top, and Inset Side/Bottom. The default is Planted, which means the back is butt jointed to the back edge of the sides, bottom, top and/or stretchers. All Inset choices can be manipulated to be either captured in a groove or inset into a rabbet. Inset Full captures the back in a grove in top, stretchers, sides and bottom. Inset Sides Only captures the back in a grove in sides only, while the top and bottom butt into back. Inset Sides/Top captures the back in a grove in the sides and top/stretcher only; the bottom butts into the back. Inset Sides/Bottom captures the back in a grove in the sides and bottom only; The top or back stretcher butts into the back.

Carcass Grove Width

Carcass Grove Width applies only if an Inset value is chosen for Back Attachment Method. If the groove width is the same or greater than the thickness of the back, then it's inset into a rabbet. The Carcass Back Groove Inset Distance would also have to be set properly.

Carcass Grove Depth

Carcass Grove Depth applies only if an Inset value is chosen for Back Attachment Method. This defaults defines the depth of the carcass groves. Note: The corresponding tongue length is assumed to be the same as the groove depth. Clearance is provided by the Back Clearance parameter.

Carcass Grove Inset Distance

Carcass Grove Inset Distance applies only if an Inset value is chosen for Back Attachment Method. This default must be at least as large as the thickness of the carcass back. The distance from the back edge of the cabinet to where the carcass back groove starts. If Carcass Groove Width is set to a distance greater than the thickness of the back material then this parameter indicates how far the back is inset into the cabinet and thereby dictates the width of the rabbet.

Top/Bottom/Stretcher Joinery

The Joinery section includes the defaults necessary to define the joinery used to construct the carcass.

Construction Method

The Construction Method default is a drop down with two choices: Butt Joint and Inset. The default is Butt Joint. If Inset is chosen a tongue and groove or rabbet (or mortise and tenon) for top, bottom & stretchers and dado for fixed shelves can be specified for Inset construction using the following defaults.

Pocket Front Setback

Pocket Front Setback applies only if Inset value is chosen for Construction Method. This allows the user to create a stopped dado, rabbet, or groove. Zero indicates no setback so the pocket goes all the way to

the front edge. A positive number indicates how far back the pocket starts from the front edge of the carcass part. The Pocket Bit Diameter (see CNC Setup tab Cutting Bit Table section) also comes into play here because if there is a setback, the rectangle on the DXF needs to extend past the end of the stopped dado by 1/2 the cutter diameter.

Pocket Rear Setback

Pocket Rear Setback applies only if Inset value is chosen for Construction Method. This allows the user to create a stopped dado, rabbet, or groove. Zero indicates no setback so the pocket goes all the way to the back edge. A positive number indicates how far back the pocket starts from the back edge of the carcass part. The Pocket Bit Diameter (see CNC Setup tab Cutting Bit Table section) also comes into play here because if there is a setback, the rectangle on the DXF needs to extend past the end of the stopped dado by 1/2 the cutter diameter.

Pocket Width

Pocket Width applies only if Inset value is chosen for Construction Method. A pocket could be a groove, dado, or rabbet. Pocket Width also specifies the thickness of the tongue (tenon).

• Width is 3/4", for example, if bottom/top thickness is 3/4" and you want a rabbet for top/stretchers and bottom, and dados for fixed shelves.

• Specify less than 3/4" if you wanted a tongue and groove situation. So, if this parameter is less than the thickness of the part that is being inserted, then it becomes a tongue and groove.

• If this value is greater than the nominal thickness of the plywood, it is ignored and the nominal thickness is used.

Pocket Depth

Pocket Depth applies only if Inset value is chosen for Construction Method. Indicates the depth of the pocket, if one is used. The length of the tongue would be the same as the depth of the pocket minus the Tongue Clearance specified in the General section.

Shelves

The Shelves have two dimension modification options: one for the depth and one for the width.

Shelf Depth Clearance

Shelf Depth Clearance changes the depth of the shelf by a factor of 2 X 'Shelf Depth Clearance'. For example, if the depth of the inside of a cabinet when measured from the face of the back to the front edge of a side is 22 3/16" and Shelf Depth Clearance is 1/8" the final width of the shelf will be 21 15/16". The depth has been reduced by ¼”.

Shelf Width Clearance

Shelf Width Clearance changes the width of the shelf by a factor of 2 X 'Shelf Width Clearance'. If the inside width of your cabinet from side to side is 13", and Shelf Width Clearance is 1/16", the final width of the shelf will be 12 7/8". The width has been reduced by 1/8”.

The ‘drawn as’ positioning of the shelf will be centered in the width direction, but against the back in the depth direction. Positioning it against the back is done simply to allow CutList Bridge's auto grain direction algorithm to work.

Toe Kick

The Toe Kick section includes all the defaults that pertain to the toe kick and ladder base. See Appendix A 1 Toe Kick Structure. Currently CabWriter only provides ladder base style toe kicks or no toe kicks at all. In the future we will consider integrated toe kicks if the interest is sufficient.

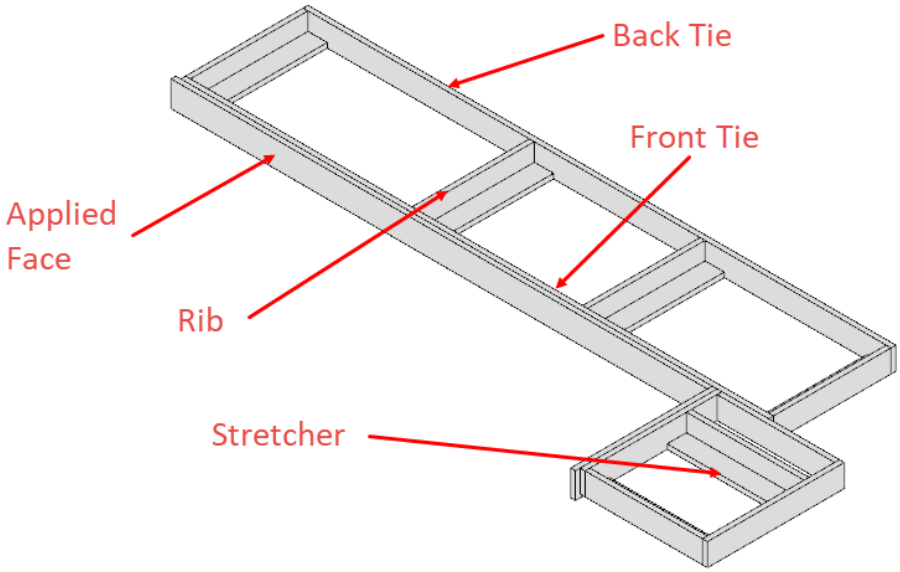

Appendix A 1 Toe Kick Structure

Toe Kick Style

Toe Kick Style is a drop down default with two user choices: Ladder Base and None.

Commented [JPZ2]: Check to see if None actually works.

- Ladder Base – This selection instructs CabWriter to drawer a ladder base construction of ribs, stretchers and ties using Sheet Good - Shop Plywood for material and an applied face, typically of the same material and species used to construct the exterior of the cabinets.

- None – The toe kick and ladder base construction are not drawn. However, the toe kick height still applies and the carcass will be drawn the distance of "Toe Kick Height" off the floor which is useful if adjustable cabinet legs/levelers are used instead of a toe kick base.

Toe Kick Height

Toe Kick Height is the distance from the floor to the top of the applied face that provides the finished look to the toe kick.

Toe Kick Depth

The definition of Toe Kick Depth depends on the selection of Cabinet Style. If Cabinet Style is Face Frame then Toe Kick Depth is the distance from the face of the face frame to the face of the applied face. If Cabinet Style is Frameless then Toe Kick Depth is the distance from the face of the doors/drawers to the face of the applied face.

End Rib Inset

The End Rib Inset is very similar to Carcass Gap (back to wall) on the Base Cabinet and Upper Cabinet tabs. It is the gap between the wall and the end of the ladder base structure, if the end of the ladder base butts up to a wall or other cabinet.

Ladder Base Gap

The ladder base structure sits off the floor by an amount Ladder Base Gap which allows for leveling and shimming. The height of the ladder base ribs, stretchers and ties is equal to Toe Kick Height minus Ladder Base Gap.

End Panel Inset Distance

When and end panel exists the applied face of the toe kick will be inset from the face of the end panel by a distance of End Panel Inset Distance.

Horizontal Stretcher Width

Horizontal Stretcher Width specifies the width of ladder base stretchers.

Applied Front Thickness

Applied Front Thickness specifies the thickness of the toe kick's applied face.

Horizontal Stretcher Position

This is a drop box default with two user choices: Bottom and Top (Top is not yet implemented).

- Bottom – Ladder base stretchers are positioned at the bottom of the structure.
- Top – Ladder base stretchers are positioned at the top of the structure (This option is not yet implemented).

Maximum Vertical Divider Spacing

Specifies the maximum distance allowed between rib/stretcher pair spacing. This default is not yet implemented.

Commented [JPZ3]: Not sure if this is checked.

Draw Toe Kick Frame?

Draw Toe Kick Frame? is a drop down with two choices: Yes and No. A choice of Yes means the toe kick will be drawn and included in all of the production reports. A choice of No means the toe kick will not be drawn and hence not appear in any of the production reports. A No choice is usually chosen when the designer intends to use adjustable feet hardware.

Cut List Tab

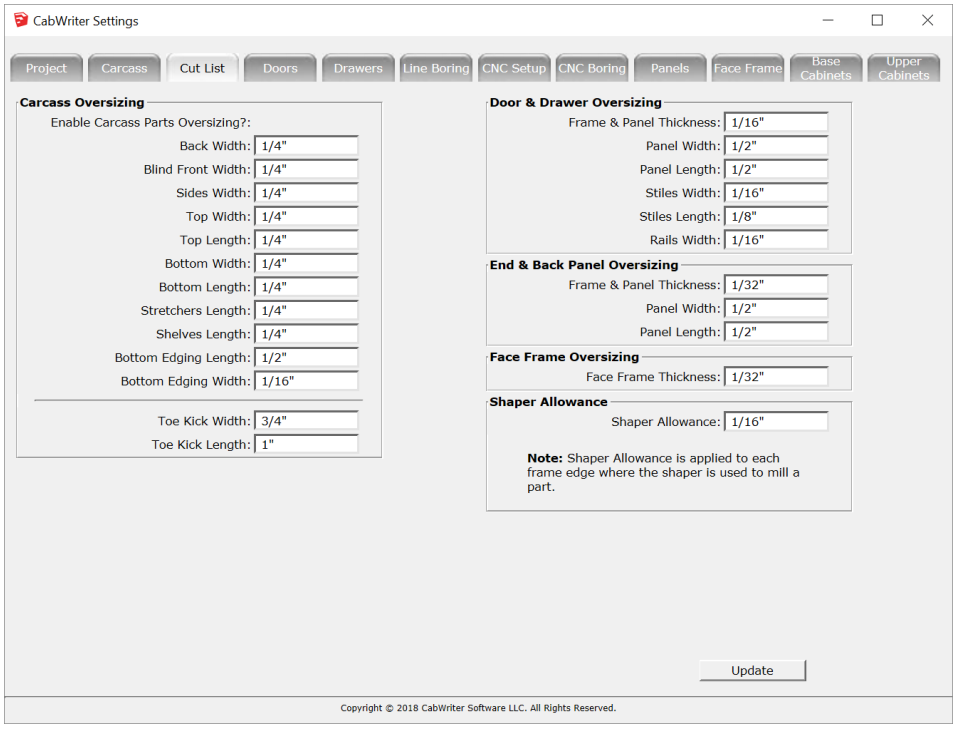

Carcass Oversizing

The Cut List tab deals exclusively with oversizing dimensions that CabWriter automatically sets as Resizing dimensions in the CutList Bridge DXF Attributes for each type of component. The user can manually change these dimensions using the Extended Entity Info dialog box on its Attributes tab. Oversizing (or Resizing) is intended primarily for cutting on panel or table saws.

Oversize values are added to the appropriate component dimension after any auto-swapping of length and width takes place and are then displayed in the Thick, Width and Length columns of the cut list as shown in Appendix A 2. The <Info> column will indicate if an oversizing dimension has been added and which dimensions have been affected; T for thickness, L for length and W for width. For example an <Info> field value of W/L means both a width and length oversizing has been applied. If the <Info> field is blank no oversizing has been applied. DXF exporting uses the final dimensions shown in the Fin T, Fin W and Fin L columns. There is no oversizing applied to DXF files intended for CNC cutting.

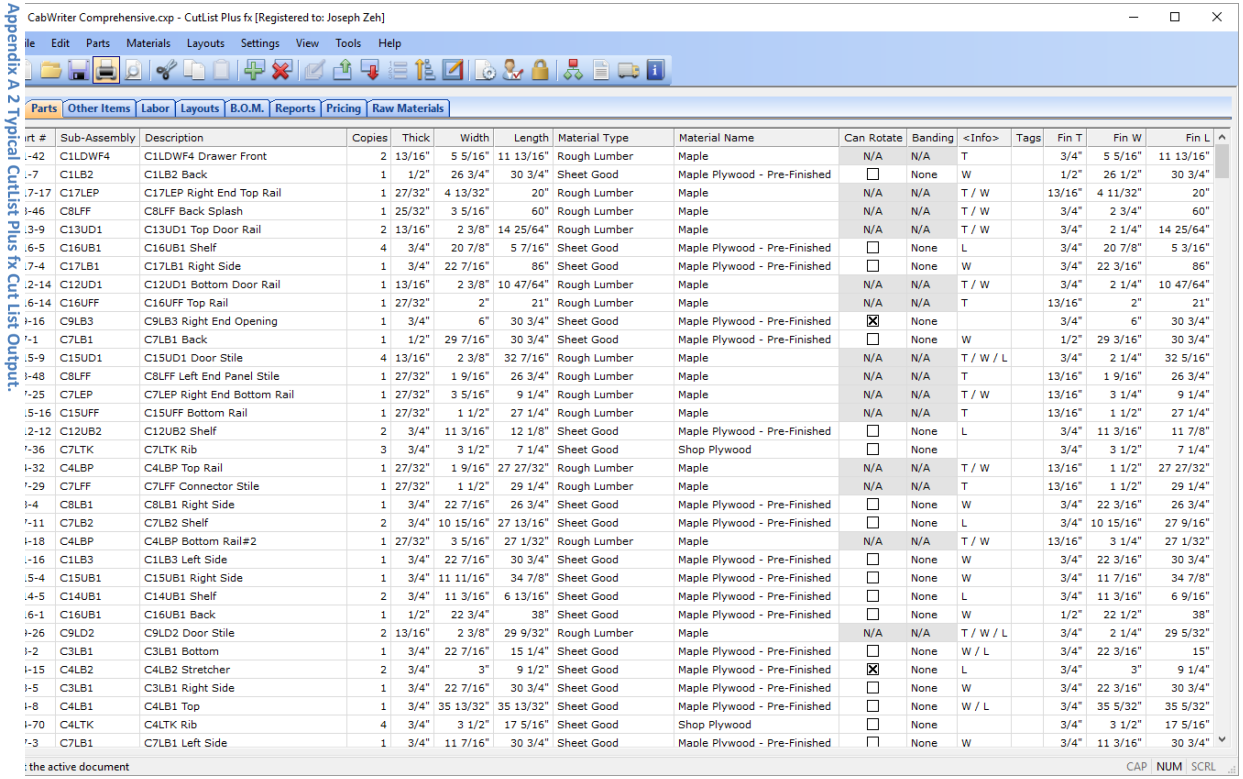

rt #	Sub-Assembly	Description	Copies	Thick	Width	Length	Material Type	Material Name	Can Rotate	Banding	<Info>	Tags	Fin T	Fin W	Fin L
-42	C1LDWF4	C1LDWF4 Drawer Front	2	13/16"	5 5/16"	11 13/16"	Rough Lumber	Maple	N/A	N/A	T		3/4"	5 5/16"	11 13/16"
-7	C1LB2	C1LB2 Back	1	1/2"	26 3/4"	30 3/4"	Sheet Good	Maple Plywood - Pre-Finished	☐	None	W		1/2"	26 1/2"	30 3/4"
7-17	C17LEP	C17LEP Right End Top Rail	1	27/32"	4 13/32"	20"	Rough Lumber	Maple	N/A	N/A	T / W		13/16"	4 11/32"	20"
-46	C8LFF	C8LFF Back Splash	1	25/32"	3 5/16"	60"	Rough Lumber	Maple	N/A	N/A	T / W		3/4"	2 3/4"	60"
3-9	C13UD1	C13UD1 Top Door Rail	2	13/16"	2 3/8"	14 25/64"	Rough Lumber	Maple	N/A	N/A	T / W		3/4"	2 1/4"	14 25/64"
6-5	C16UB1	C16UB1 Shelf	4	3/4"	20 7/8"	5 7/16"	Sheet Good	Maple Plywood - Pre-Finished	☐	None	L		3/4"	20 7/8"	5 3/16"
7-4	C17LB1	C17LB1 Right Side	1	3/4"	22 7/16"	86"	Sheet Good	Maple Plywood - Pre-Finished	☐	None	W		3/4"	22 3/16"	86"
2-14	C12UD1	C12UD1 Bottom Door Rail	1	13/16"	2 3/8"	10 47/64"	Rough Lumber	Maple	N/A	N/A	T / W		3/4"	2 1/4"	10 47/64"
6-14	C16UFF	C16UFF Top Rail	1	27/32"	2"	21"	Rough Lumber	Maple	N/A	N/A	T		13/16"	2"	21"
-16	C9LB3	C9LB3 Right End Opening	1	3/4"	6"	30 3/4"	Sheet Good	Maple Plywood - Pre-Finished	☒	None			3/4"	6"	30 3/4"
-1	C7LB1	C7LB1 Back	1	1/2"	29 7/16"	30 3/4"	Sheet Good	Maple Plywood - Pre-Finished	☐	None	W		1/2"	29 3/16"	30 3/4"
5-9	C15UD1	C15UD1 Door Stile	4	13/16"	2 3/8"	32 7/16"	Rough Lumber	Maple	N/A	N/A	T / W / L		3/4"	2 1/4"	32 5/16"
-48	C8LFF	C8LFF Left End Panel Stile	1	27/32"	1 9/16"	26 3/4"	Rough Lumber	Maple	N/A	N/A	T		13/16"	1 9/16"	26 3/4"
-25	C7LEP	C7LEP Right End Bottom Rail	1	27/32"	3 5/16"	9 1/4"	Rough Lumber	Maple	N/A	N/A	T / W		13/16"	3 1/4"	9 1/4"
5-16	C15UFF	C15UFF Bottom Rail	1	27/32"	1 1/2"	27 1/4"	Rough Lumber	Maple	N/A	N/A	T		13/16"	1 1/2"	27 1/4"
2-12	C12UB2	C12UB2 Shelf	2	3/4"	11 3/16"	12 1/8"	Sheet Good	Maple Plywood - Pre-Finished	☐	None	L		3/4"	11 3/16"	11 7/8"
-36	C7LTK	C7LTK Rib	3	3/4"	3 1/2"	7 1/4"	Sheet Good	Shop Plywood	☐	None			3/4"	3 1/2"	7 1/4"
-32	C4LBP	C4LBP Top Rail	1	27/32"	1 9/16"	27 27/32"	Rough Lumber	Maple	N/A	N/A	T / W		13/16"	1 1/2"	27 27/32"
-29	C7LFF	C7LFF Connector Stile	1	27/32"	1 1/2"	29 1/4"	Rough Lumber	Maple	N/A	N/A	T		13/16"	1 1/2"	29 1/4"
-4	C8LB1	C8LB1 Right Side	1	3/4"	22 7/16"	26 3/4"	Sheet Good	Maple Plywood - Pre-Finished	☐	None	W		3/4"	22 3/16"	26 3/4"
-11	C7LB2	C7LB2 Shelf	2	3/4"	10 15/16"	27 13/16"	Sheet Good	Maple Plywood - Pre-Finished	☐	None	L		3/4"	10 15/16"	27 9/16"
-18	C4LBP	C4LBP Bottom Rail#2	1	27/32"	3 5/16"	27 1/32"	Rough Lumber	Maple	N/A	N/A	T / W		13/16"	3 1/4"	27 1/32"
-16	C1LB3	C1LB3 Left Side	1	3/4"	22 7/16"	30 3/4"	Sheet Good	Maple Plywood - Pre-Finished	☐	None	W		3/4"	22 3/16"	30 3/4"
5-4	C15UB1	C15UB1 Right Side	1	3/4"	11 11/16"	34 7/8"	Sheet Good	Maple Plywood - Pre-Finished	☐	None	W		3/4"	11 7/16"	34 7/8"
4-5	C14UB1	C14UB1 Shelf	2	3/4"	11 3/16"	6 13/16"	Sheet Good	Maple Plywood - Pre-Finished	☐	None	L		3/4"	11 3/16"	6 9/16"
6-1	C16UB1	C16UB1 Back	1	1/2"	22 3/4"	38"	Sheet Good	Maple Plywood - Pre-Finished	☐	None	W		1/2"	22 1/2"	38"
-26	C9LD2	C9LD2 Door Stile	2	13/16"	2 3/8"	29 9/32"	Rough Lumber	Maple	N/A	N/A	T / W / L		3/4"	2 1/4"	29 5/32"
-2	C3LB1	C3LB1 Bottom	1	3/4"	22 7/16"	15 1/4"	Sheet Good	Maple Plywood - Pre-Finished	☐	None	W / L		3/4"	22 3/16"	15"
-15	C4LB2	C4LB2 Stretcher	2	3/4"	3"	9 1/2"	Sheet Good	Maple Plywood - Pre-Finished	☒	None	L		3/4"	3"	9 1/4"
-5	C3LB1	C3LB1 Right Side	1	3/4"	22 7/16"	30 3/4"	Sheet Good	Maple Plywood - Pre-Finished	☐	None	W		3/4"	22 3/16"	30 3/4"
-8	C4LB1	C4LB1 Top	1	3/4"	35 13/32"	35 13/32"	Sheet Good	Maple Plywood - Pre-Finished	☐	None	W / L		3/4"	35 5/32"	35 5/32"
-70	C4LTK	C4LTK Rib	4	3/4"	3 1/2"	17 5/16"	Sheet Good	Shop Plywood	☐	None			3/4"	3 1/2"	17 5/16"
-3	C7LB1	C7LB1 Left Side	1	3/4"	11 7/16"	30 3/4"	Sheet Good	Maple Plywood - Pre-Finished	☐	None	W		3/4"	11 3/16"	30 3/4"

Appendix A 2 Typical CutList Plus fx Cut List Output.

Enable Carcass Parts Oversizing?

This default is a drop down choice or 'Yes' or 'No'. It is not implemented at this time.

Commented [JPZ4]: Need to implement this option.

Back Width

Back Width is the horizontal dimension of a cabinet back and runs perpendicular to the grain direction. It may not be the longest dimension; in fact in any cabinet that is narrower than it is high it isn't. The width is oversized by this default amount.

Blind Front Width

Blind Front Width is the horizontal dimension of a blind cabinet's blind front and runs perpendicular to the grain direction. See Appendix A 3. The width is oversized by this default amount.

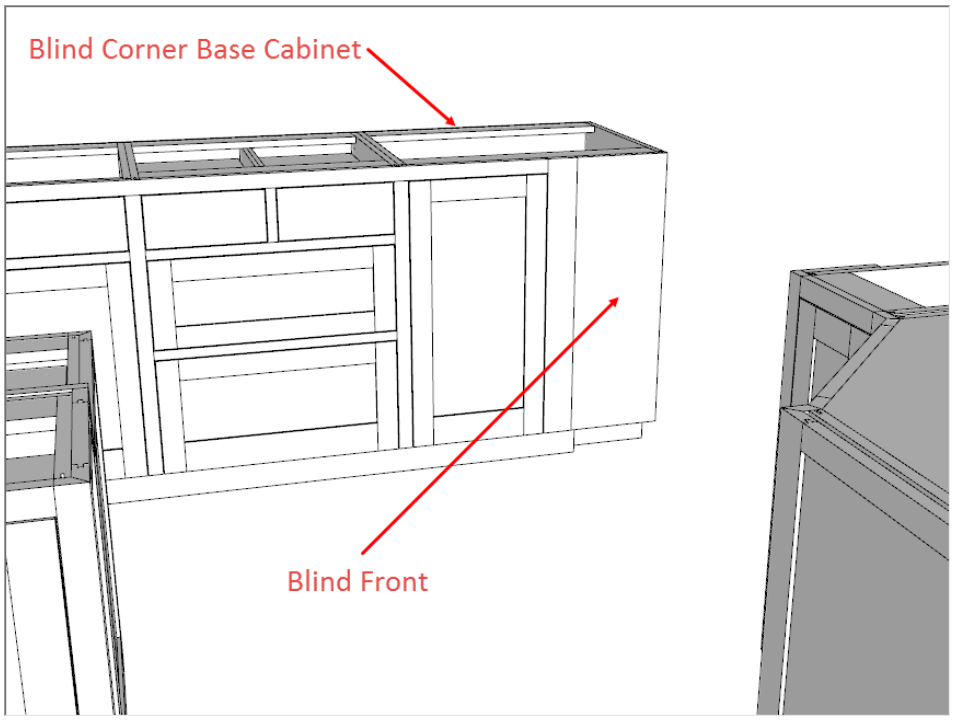

Appendix A 3 Blind Front of a Blind Corner Base Cabinet.

Sides Width

Sides Width is the horizontal dimension of a cabinet's side and is oversized by this default amount.

Top Width
This option does not apply if Stretchers are chosen rather than Solid Top on the Base Cabinets tab. Top Width is the cross grain direction, i.e. from front to back of the cabinet, and is oversized by this default amount.

Top Length
Top Length is with the grain direction of the cabinet top, i.e. from side to side of the cabinet, and is oversized by this default amount.

Bottom Width
Bottom Width is the cross grain direction, i.e. from front to back of the cabinet, and is oversized by this default amount.

Bottom Length
Bottom Length is with the grain direction, i.e. from side to side of the cabinet, and is oversized by this default amount.

Stretcher Length
This option only applies if Stretchers are chose in the Base Cabinets tab. Stretcher Length is from side to side of the cabinet, and is oversized by this default amount.

Shelves Length
Shelves Length is the grain direction, i.e. from side to side of the cabinet, and is oversized by this default amount.

Bottom Edging Length
Bottom Edging Length is the grain direction, i.e. from side to side of the cabinet, and is oversized by this default amount.

Bottom Edging Width
Bottom Edging Width is the cross grain direction, i.e. from top to bottom of the cabinet, and is oversized by this default amount.

Toe Kick Width
This default applies only to toe kick applied faces. Toe Kick Width is the cross grain direction, i.e. from top to bottom of the cabinet, and is oversized by this default amount.

Toe Kick Length
This default applies only to toe kick applied faces. Toe Kick Length is the grain direction, i.e. from end to end of the cabinet, and is oversized by this default amount.

Door & Drawer Oversizing

Frame & Panel Thickness

Frame & Panel Thickness applies only to the stiles and rails of a frame and panel frame. Stiles and rails are oversized in thickness by this default amount.

Panel Width

Panel Width is the cross grain direction, i.e. from stile to stile of the door or drawer, and is oversized by this default amount.

Panel Length

Panel Length is the grain direction, i.e. from rail to rail of the door or drawer, and is oversized by this default amount.

Stiles Width

Stiles Width is the cross grain direction, i.e. horizontally across the stile, and is oversized by this default amount.

Stiles Length

Stiles Length is with the grain direction, i.e. vertically, and is oversized by this default amount.

Rails Width

Rails Width is the cross grain direction, i.e. vertically across the rail, and is oversized by this default amount.

End & Back Panel Oversizing

Frame & Panel Thickness

Frame & Panel Thickness applies only to the stiles and rails of a frame and panel frame. Stiles and rails are oversized in thickness by this default amount.

Panel Width

Panel Width is the cross grain direction, i.e. from stile to stile of the end or back panel, and is oversized by this default amount.

Panel Length

Panel Length is with the grain direction, i.e. from rail to rail of the end or back panel, and is oversized by this default amount.

Face Frame Oversizing

Face Frame Thickness

Face Frame Thickness applies to all components of a face frame; stiles, rails, mid stiles and mid rails. The thickness of these components is oversized by this default amount.

Shaper Allowance

Shaper Allowance

Shaper Allowance applies to the width of all rails and stiles of a frame and panel structure milled by shaper. For example, a Mid Stile of a Back Panel would be oversized by twice that amount because two edges are milled by the shaper.

The reason there is a both a rail and stile oversizing width described above and a shaper allowance is for additional flexibility. Doors are often built oversized to allow for fitting, as in an inset application, which requires adding width to the stiles and rails which would be done with the settings in the Door and Drawer and/or End Panel oversizing section. If the doors or end/back panel frames are manufactured using a shaper with an outboard fence, often an additional amount of width is added to the stiles and rails before milling the grooves or profile in them so that the shaper cutter can mill the part to it's final width. In this case, the Shaper Allowance parameter is used to add the additional width to the cut list.

The total additional width added to the cut list is Stiles Width or Rail Width plus Shaper Allowance in the case of a door, or just Shaper Allowance in the case of an end or back panel.

Doors Tab

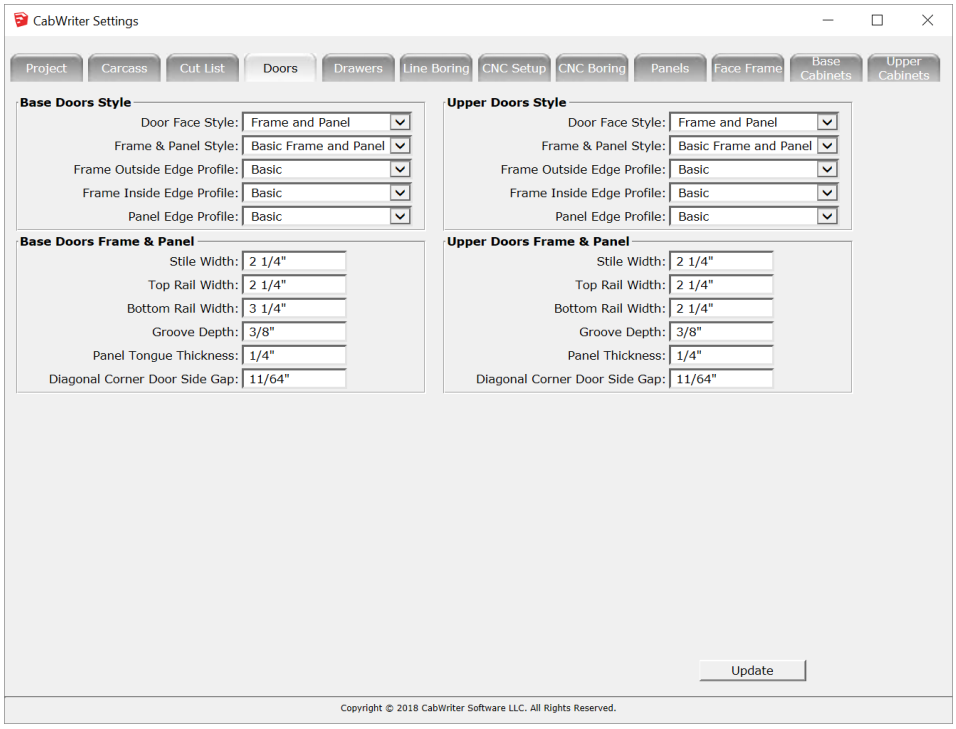

Base Doors Style

The Base Doors Style section provides for specifying three types of doors: slab, mortise & tenon and cope & stick. These three door style types are chosen based on the selections made in the following five drop downs.

Door Face Style

Door Face Style is a drop down default offering the user two choices: Frame and Panel or Slab. Slab is a choice the user would make if the doors are to be one piece made from plywood or engineered material. Frame and Panel is the choice for five piece doors made of rails, stiles and panels.

Frame & Panel Style

Frame & Panel Style is a drop down default offering the user two choices: Basic Frame and Panel or Profile Cope & Stick. Basic Frame and Panel is chosen if the doors are simple mortise & tenon construction. Profile Cope & Stick allows for choices in the edge treatment of the stiles, rails and panel.

Frame Outside Edge Profile

Frame Outside Edge Profile is a drop down with two choices: Basic and Bevel 45. Basic means the outside edge is untreated; that is, left with 90° edge cut. Bevel 45 means that the outside front edge is treated with a 45° bevel.

Frame Inside Edge profile

Frame Inside Edge profile is a drop down with six choices: Basic, Bevel 45, Chamfer, Inset Radius, Ogee and Standard. Basic and Bevel 45 are described above. Chamfer is a 24.5° inset bevel. Inset Radius is an inset quarter round. Ogee is the typical s-curve. Standard is a quarter round with no inset.

Panel Edge Profile

Panel Edge Profile is a drop down with five choices: Basic, Cove Raised, Curve Raised, Shaker Raised and Standard Raised. Basic is no edge treatment; the panel is a simple flat panel. Cove and Curve Raised are two gentle curves; the Curve Raised also has a step. Shaker and Standard Raised has beveled steps; Shaker has one step and Standard has two.

The user can combine these profiles in any order to get different door looks.

Base Doors Frame & Panel

This section contains the defaults that defines the dimensions of a door's frame and panel.

Stile width

This default specifies the width of the base door's stiles.

Top Rail Width

This default specifies the width of the base door's top rail.

Bottom Rail Width

This default specifies the width of the base door's bottom rail.

Groove Depth

The Groove Depth specifies the depth of the dado cut into the stiles and rails to accept the door's panel.

Panel Tongue Thickness

This default specifies the thickness of the base door's captured panel. By default, this also specifies the width of the groove in the door's stiles and rails. If the panel is a raised panel this default applies only to the fielded edge captured in the stiles and rails groove.

Diagonal Corner Door Stile Gap

This default applies only to base diagonal corner cabinets drawn in Frameless style. It defines the gap between the edge of the door and the inside door opening. See Appendix A 4 Diagonal Corner Door Stile Gap.

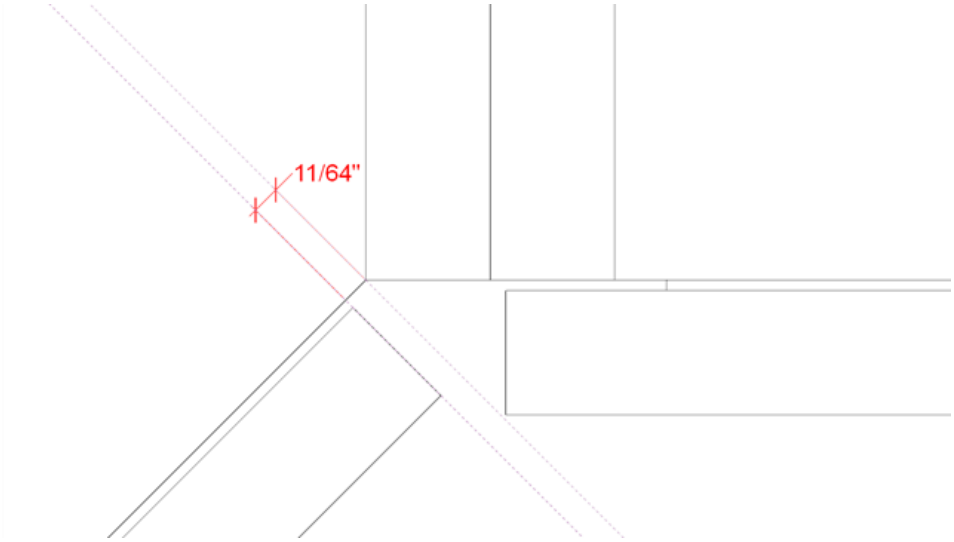

Appendix A 4 Diagonal Corner Door Stile Gap

Upper Doors Style

Upper Doors Style section provides for specifying three types of doors: slab, mortise & tenon and cope & stick. These three door style types are chosen based on the selections made in the following five drop downs.

Door Face Style

Door Face Style is a drop down default offering the user two choices: Frame and Panel or Slab. Slab is a choice the user would make if the doors are to be one piece made from plywood or engineered material. Frame and Panel is the choice for five piece doors made of rails, stiles and panels.

Frame & Panel Style

Frame & Panel Style is a drop down default offering the user two choices: Basic Frame and Panel or Profile Cope & Stick. Basic Frame and Panel is chosen if the doors are simple mortise & tenon construction. Profile Cope & Stick allows for choices in the edge treatment of the stiles, rails and panel.

Frame Outside Edge Profile

Frame Outside Edge Profile is a drop down with two choices: Basic and Bevel 45. Basic means the outside edge is untreated; that is, left with 90° edge cut. Bevel 45 means that the outside front edge is treated with a 45° bevel.

Frame Inside Edge profile

Frame Inside Edge profile is a drop down with six choices: Basic, Bevel 45, Chamfer, Inset Radius, Ogee and Standard. Basic and Bevel 45 are described above. Chamfer is a 24.5° inset bevel. Inset Radius is an inset quarter round. Ogee is the typical s-curve. Standard is a quarter round with no inset.

Panel Edge Profile

Panel Edge Profile is a drop down with five choices: Basic, Cove Raised, Curve Raised, Shaker Raised and Standard Raised. Basic is no edge treatment; the panel is a simple flat panel. Cove and Curve Raised are two gentle curves; the Curve Raised also has a step. Shaker and Standard Raised has beveled steps; Shaker has one step and Standard has two.

The user can combine these profiles in any order to get different door looks.

Upper Doors Frame & Panel

This section contains the defaults that defines the dimensions of a door's frame and panel.

Stile width

This default specifies the width of the upper door's stiles.

Top Rail Width

This default specifies the width of the upper door's top rail.

Bottom Rail Width

This default specifies the width of the upper door's bottom rail.

Groove Depth

The Groove Depth specifies the depth of the dado cut into the stiles and rails to accept the door's panel.

Panel Thickness

This default specifies the thickness of the door's captured panel. By default, this also specifies the width of the groove in the door's stiles and rails. If the panel is a raised panel this default applies only to the fielded edge captured in the stiles and rails groove.

Diagonal Corner Door Stile Gap

This default applies only to upper diagonal corner cabinets drawn in Frameless style. It defines the gap between the edge of the door and the inside door opening. See Appendix A 4 Diagonal Corner Door Stile Gap.

Drawers Tab

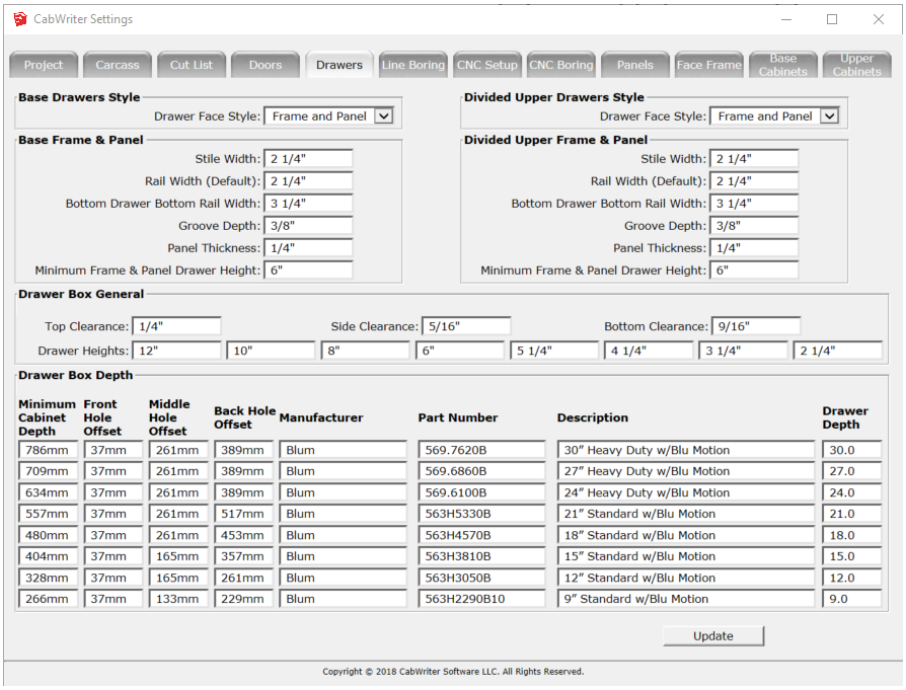

Base Drawers Style

Base Drawers Style is a drop down default offering the user two choices: Frame and Panel or Slab. Slab is a choice the user would make if the drawer fronts are to be one piece made from plywood or engineered material. Frame and Panel is the choice for five piece drawer fronts made of rails, stiles and panels. The latter three components are specified in the next section.

Base Frame & Panel

Stile width

Specifies the width of the base drawer front's stiles.

Rail Width (Default)

Specifies the default width of the base drawer front's rails.

Bottom Drawer Bottom Rail Width

Specifies the width of the bottom drawer's bottom rail when a lower face frame rail is not drawn. It overrides the Rail Width (Default) parameter.

Groove Depth
Specifies the depth of the dado cut into the stiles and rails to accept the drawer front's panel.

Panel Thickness
Specifies the thickness of the drawer front's captured panel, which by default, defines the width of the groove in the stiles and rails. If the panel is a raised panel this default applies only to the fielded edge captured in the stiles and rails groove.

Minimum Frame & Panel Drawer Height
Specifies the minimum frame and panel drawer front height, below which CabWriter will draw a slab drawer front regardless of the Base Drawers Style parameter.

Divided Upper Drawers Style
Divided Upper Drawers Style is a drop down default offering the user two choices: Frame and Panel or Slab. Slab is a choice the user would make if the doors are to be one piece made from plywood or engineered material. Frame and Panel is the choice for five piece doors made of rails, stiles and panels. The latter three components are specified in the next section.

Divided Upper Frame & Panel
Stile width
Specifies the width of the upper drawer front's stiles.

Rail Width (Default)
This default specifies the default width of the upper drawer front's rails.

Bottom Drawer Bottom Rail Width
Specifies the width of the bottom drawer's bottom rail when a lower face frame rail is not drawn. It overrides the Rail Width (Default) parameter.

Groove Depth
Specifies the depth of the dado cut into the stiles and rails to accept the drawer front's panel.

Panel Thickness
This default specifies the thickness of the base door's captured panel. By default, this also specifies the width of the groove in the door's stiles and rails. If the panel is a raised panel this default applies only to the fielded edge captured in the stiles and rails groove.

Minimum Frame & Panel Drawer Height
Specifies the minimum frame and panel drawer front height, below which CabWriter will draw a slab drawer front regardless of the Base Drawers Style parameter.

Drawer Box General

Because many cabinetmakers have their drawer boxes made by a third party, and because drawer box construction varies so widely, CabWriter does not drawer the sides, front, back and bottom of the box. Instead it simply draws a cubic shape with dimensions that represent the outside dimensions of the drawer box. This section contains the parameters that will define the height and width dimensions of this cubic shape.

Top Clearance

Top Clearance specifies the clearance needed between the top of the drawer box and any obstructing structure such as a mid-rail, mid stretcher or rail.

Side Clearance

Side Clearance specifies the clearance needed between the side of the drawer box and any obstructing structure such as a stile or side.

Bottom Clearance

Bottom Clearance specifies the clearance needed between the bottom of the drawer box and any obstructing structure such as a mid-rail, mid stretcher or rail.

Drawer Heights

Drawer Heights provide an array of drawer heights the cabinetmaker prefers to build or purchase.

Drawer Box Depth

This section provides a two dimensional array of drawer slide specifications; eight slides in all. Not only do these parameters specify the depth of the drawer box, but if CNC drilling is enabled, then this table also specifies where the drawer slide holes should be placed on the carcass side from front to back. These defaults should be ordered from deepest Drawer Depth to shallowest Drawer Depth in top to bottom order.

At this time, it's not practical for CabWriter to maintain a database of every slide from every manufacturer to obtain this information. The user can update this table with the slides that are most commonly used in their shop, or are being used for a particular project. CabWriter has pre-populated this list with the most common Blum Tandem Undermount slide information using metric dimensions for maximum accuracy, although it can be specified with imperial measurements as well. Since these slides are compliant with the European 32mm system, these same settings will apply to many other slide types and manufacturers.

Please note that CabWriter does not draw the actual drawer slides, this information is only used to calculate the depth of the drawer box and properly place the mounting holes in CNC Drilling mode.

Minimum Cabinet Depth

This default specifies the minimum depth of the cabinet from the inside face of the back to the outside face of the face frame (or drawer front in the case of Frameless Cabinet Style). If the interior cabinet depth is smaller than this number, the next smallest slide will be chosen that can fit in the cabinet.

Front Hole Offset

Specifies the offset to the center of the front hole from the front edge of the carcass side. If this parameter is not specified, no hole will be drilled.

Commented [JPZ5]: Check to see if this is true.

Middle Hole Offset

Specifies the offset to the center of the middle hole from the front edge of the carcass side. If this parameter is not specified, no hole will be drilled.

Back Hole Offset

Specifies the offset to the center of the back hole from the front edge of the carcass side. If this parameter is not specified, no hole will be drilled.

Manufacturer

Specifies the name of the manufacturer of the drawer slide.

Part Number

Specifies the part number of the drawer slide.

Description

Description of the drawer slide.

Drawer Depth

Specifies the depth of the drawer box to be used with this drawer slide.

Sizing the Drawer Box

CabWriter will choose from the Drawer Heights array the tallest height that will fit within the drawer opening and provide the specified Top and Bottom Clearance. The width will be calculated as the drawer opening width minus 2 X Side Clearance. The drawer depth will be chosen based on the longest slider that will fit within the Minimum Cabinet Depth.

Line Boring Tab

The parameters contained in the Line Boring tab apply only if Line Boring is chosen for Drilling Method in the General section of the Project tab.

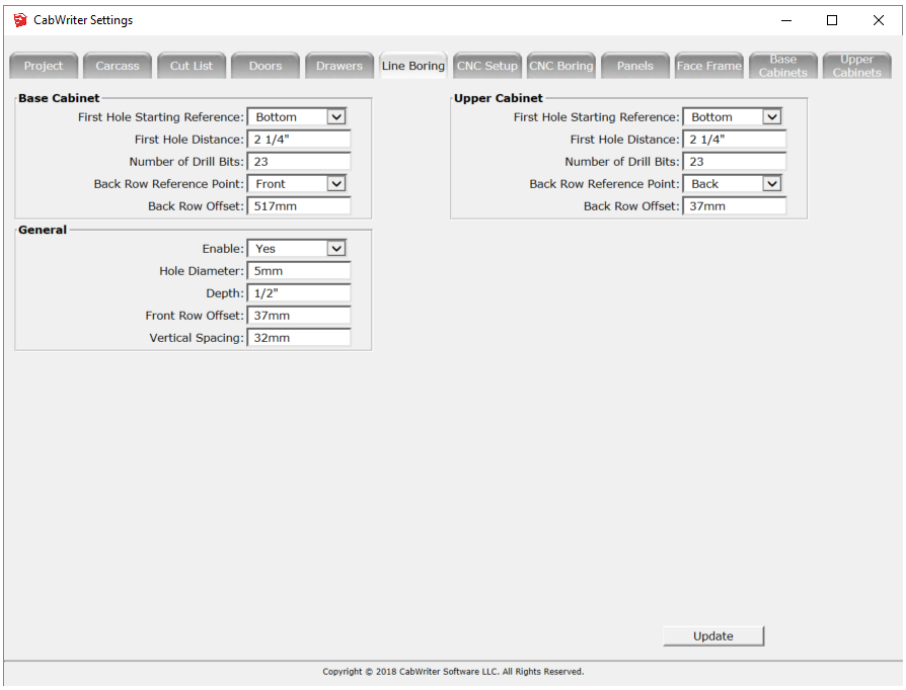

Base Cabinet

First Hole Starting Reference

This is a drop down default that offers the user two options: Top or Bottom.

- Top – when chosen the first hole's position is referenced from the inside face of the cabinet's top, specified by First Hole Distance, and subsequent holes proceed downward.
- Bottom – when chosen the first hole's position is referenced from the inside face of the cabinet's bottom, specified by First Hole Distance, and subsequent holes proceed upward.

First Hole Distance

Specifies the distance the first hole will be drilled from Top or Bottom as chosen in First Hole Starting Reference.

Number of Drill Bits

Specifies the number of drill bits in the line bore machine.

Back Row Reference Point

This is a drop down default that offers the user two options: Front or Back.

- Front – when chosen the back row column of shelf holes are centered at a distance specified by Back Row Offset and referenced to the front edge of the cabinet's side.
- Back – when chosen the back row column of shelf holes are centered at a distance specified by Back Row Offset and referenced to the inside face of the cabinet's back.

Back Row Offset

Specifies the distance the back row column of shelf holes will be drilled from the Front or Back as chosen in Back Row Reference Point.

Upper Cabinet

First Hole Starting Reference

This is a drop down default that offers the user two options: Top or Bottom.

- Top – when chosen the first hole's position is referenced from the inside face of the cabinet's top, specified by First Hole Distance, and subsequent holes proceed downward.
- Bottom – when chosen the first hole's position is referenced from the inside face of the cabinet's bottom, specified by First Hole Distance, and subsequent holes proceed upward.

First Hole Distance

Specifies the distance the first hole will be drilled from Top or Bottom as chosen in First Hole Starting Reference.

Number of Drill Bits

Specifies the number of drill bits in the line bore machine.

Back Row Reference Point

This is a drop down default that offers the user two options: Front or Back.

- Front – when chosen the back row column of shelf holes are centered at a distance specified by Back Row Offset and referenced to the front edge of the cabinet's side.
- Back – when chosen the back row column of shelf holes are centered at a distance specified by Back Row Offset and referenced to the inside face of the cabinet's back.

Back Row Offset

Specifies the distance the back row column of shelf holes will be drilled from the Front or Back as chosen in Back Row Reference Point.

General

Enable

This is a drop down default that offers the user two options: Yes or No.

- Yes – drawing of line boring holes is enabled.
- No – drawing of line boring holes is disabled.

Hole Diameter

Specifies the line boring machine's drill bit diameter.

Depth

Specifies the depth to which the line boring machine will drill.

Front Row Offset

The reference datum for the front row shelf hole column is always the front edge of the cabinet side. Front Row Offset specifies the distance from the front edge that the column of holes will be drawn.

Vertical Spacing

Specifies the center to center spacing of the holes in the column.

CNC Setup Tab

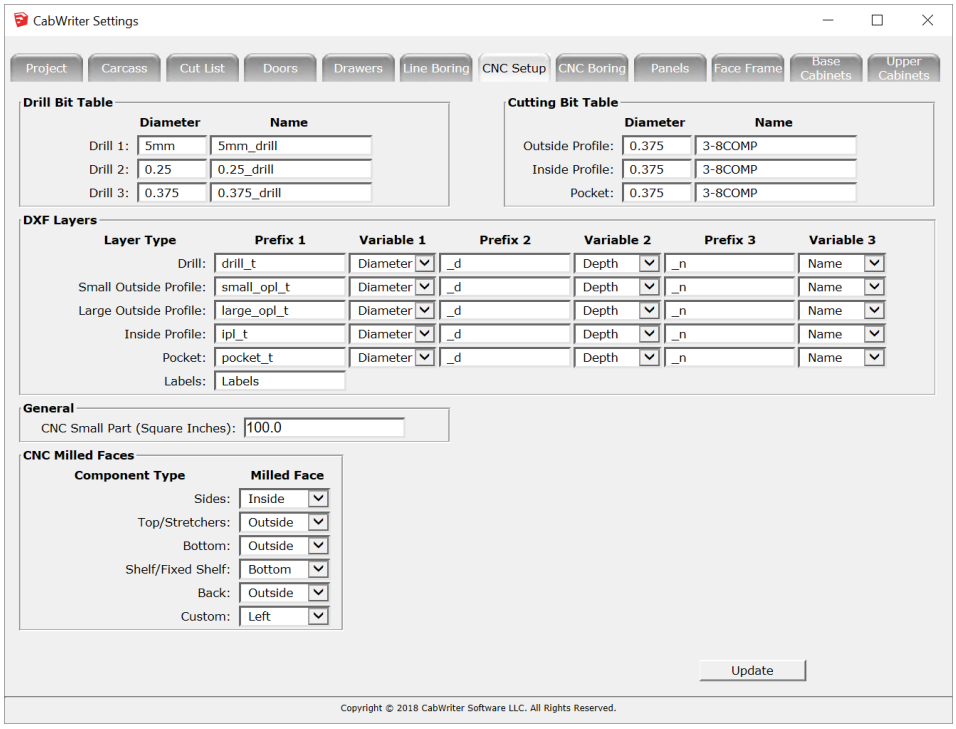

The CNC Setup tab permits the cutting of dadoes, groves, pockets and rabbets and building cabinets using several construction methods, along with the associated DXF features, to provide full support for both inside and outside profile and pocket cuts on the CNC as well as drilling.

DXF files are produced by CutList Bridge DXF. By judiciously choosing DXF layer names the user can simplify tool pathing. The CNC Setup tab provides the user with complete flexibility in DXF layer naming.

DXF Layer Naming

Many CAM software packages have the ability to automatically create tool paths based on the layer name, but each of the packages uses a different format for layer names. CabWriter provides the ability for the user to customize the layer names by filling in a table with their preferred names. Since the layer name can include parameters such as depth, drill bit size, or even material thickness, a facility is provided to include those parameters in the layer name using strings and drop down boxes.

Layer names are defined by six strings concatenated together. Strings are contained within curly braces { }, but the curly braces are not part of the layer name, but simply used to indicate a string of characters. Refer to the CNC Setup tab for this example.

Layer names are created by concatenating strings as follows:

{Prefix 1}{Variable 1}{Prefix 2}{Variable 2}{Prefix 3}{Variable 3}

CabWriter places shelf holes on the Drill layer and using the defaults shown in the CNC Setup tab for Drill layer the resulting layer name for shelf holes would be:

drill_t5mm_d0.5_n5mm_drill

In this example t stands for diameter, d for depth and n for name. This layer name can be read as “drill a hole with a diameter of 5mm to a depth of 0.5” using a drill bit named 5mm_drill”.

Note that the prefixes in the Prefix columns are specified by the user. The user can choose either Depth, Diameter or Name from the drop downs for the Variable columns.

If CabWriter finds a hole to be the diameter of a drill bit in the Drill Bit Table section it will be placed on the Drill layer with a name defined by the Layer Type – Drill. In this case Prefix 1 is {drill_t}. Variable 1 is set to Diameter, so CabWriter substitutes the Diameter of 5mm, because shelf holes are set at 5mm and this diameter is found in the Drill 1 row of the Drill Bit Table. Hence Variable 1 is {5mm}. Prefix 2 for the Drill Layer Type is {_d}, which stands for depth of the hole. Hence Variable 2 will be {0.5} because shelf holes are drilled ½” deep. Prefix 3 for the Drill layer is {_n} for name. Lastly, Variable 3 is set to Name and the name shown for Drill 1 is 5mm_drill or {5mm_drill}. Putting all the strings together in order gives us:

{drill_t}{5mm}{_d}{0.5}{_n}{5mm_drill}

Or, because the curly braces are not included in the layer name:

drill_t5mm_d0.5_n5mm_drill

CabWriter will examine all holes, dadoes, groves, rabbets and cutouts to place them on one of the following Layer Type(s):

- Drill
- Small Outside Profile
- Large Outside Profile
- Inside Profile
- Pocket

There is also a Layer Type – Labels which is where the component name is placed.

Drill Bit Table

The Drill Bit Table permits the specifying of three drill bits. Many CNC machines have bit changers which will choose one of these bits based on the DXF Layer name or by tool pathing instructions.

There will be one Drill Layer for each unique hole diameter/depth combination as long as the hole diameter matches an entry in the Drill Bit Table; if the hole diameter does not match anything in the table, it will be considered a Pocket Layer or Inside Profile Layer, depending on its depth. The drill table is a three entry table that will contain the exact diameter of the drill bits supported by the users CNC as well as a string representing the name as it appears in the users CAM software. The exact string that is entered in the table will be used as the label for the diameter in the layer name. The CabWriter detected depth will be used as the depth in the layer name. CabWriter will permit three different drill bits to be defined in the Drill Bit Table. The number of different drill layer names could be large because for each drill diameter there could be multiple drill depths.

Note: The drill layer name should always include at least the drill diameter and depth or it will not be possible to differentiate between different hole sizes and depths.

Drill

Drill 1, Drill 2 and Drill 3 are defaults for up to three different drill bit definitions. A drill bit definition includes the bit diameter in the Diameter column, and a bit name in the Name column.

Cutting Bit Table

The Cutting Bit Table permits the specifying of three cutter bits. Many CNC machines have bit changers which will choose one of these bits based on the DXF Layer name or by tool pathing instructions.

Outside Profile

The Outside Profile cutter bit is used to cut the outside profile of each part. Its definition includes the bit diameter in the Diameter column, and a bit name in the Name column. Outside profile cutters generally cut to a depth equal to the thickness of the sheet material, although in several passes.

Inside Profile

The Inside Profile cutter bit is used to cut the inside profiles such cut outs. Its definition includes the bit diameter in the Diameter column, and a bit name in the Name column. Inside profile cutters generally cut to a depth equal to the thickness of the sheet material, although in several passes.

Pocket

The Pocket cutter bit is used to cut pockets such as mortises, groves and dadoes. Its definition includes the bit diameter in the Diameter column, and a bit name in the Name column. Pocket profile cutters generally cut to a depth shallower than the thickness of the sheet material and generally is a smaller diameter than the Outside or Inside Profile cutters.

DXF Layers

There are six DXF Layer Type(s) though as explained may result in many more layers in the DXF file.

Drill

Shelf holes, hinge plate holes, drawer slide holes, system holes, construction holes and connector holes are all placed on the Layer Type – Drill. If the user adds holes with the native SketchUp tools and their diameter(s) match one of the bits in the Drill Bit Table, they too will be placed on a Layer Type – Drill layer.

Small Outside Profile

The Small Outside Profile layer is used only for outside perimeter cuts on small CabWriter parts. Small parts are those whose area is equal to or smaller than that specified by default CNC Small Part in the General section of the CNC Setup tab. CabWriter permits one Outside Profile cutter bit to be specified in the Cutting Bit Table. This same bit is used for both large and small part cuts.

Large Outside Profile

The Large Outside Profile layer is used only for outside perimeter cuts on large (normal) CabWriter parts. Large parts are those whose area is larger than that specified by default CNC Small Part in the General section of the CNC Setup tab. CabWriter permits one Outside Profile cutter bit to be specified in the Cutting Bit Table. This same bit is used for both large and small part cuts.

Inside Profile

The Inside Profile layer is for the cutouts on the interior of parts. Note: If CabWriter detects a hole (circle) on a part that goes all the way through and it's diameter does not match an entry in the Drill Bit Table, it will be considered an inside profile and added to this layer. Inside Profiles are simply cutouts such as those for obstructions, plumbing and electrical fixtures. CabWriter permits one Inside Profile cutter bit to be specified in the Cutting Bit Table.

Pocket

The Pocket Layer is for cutouts on the interior of parts that do not go all the way through to the other side. This includes interior pockets of any shape, dados, rabbets, tongues, grooves, etc.

The geometry will be defined by the shape of the pocket cut into the material either by CabWriter when drawing the cabinet, or by the user after the cabinet is drawn. In the case of a pocket that runs off the material in the case of a rabbet or dado/groove, for example, CabWriter will need to create a rectangle that extends past each edge that the pocket exits on a distance equal to half the diameter of the cutting bit that will be used as specified in the Cutting Bit Table. CabWriter permits one pocket cutting bit to be specified in the Cutting Bit Table.

Labels

The Labels layer is used to place a part's number and name on. The user can change the tag 'Labels', but whatever the name it will always contain the each part's number and name.

General

CNC Small Part

CNC Small Part is a default whose units are square inches. This lets CutList Bridge DXF know which parts are considered too small in area for the CNC vacuum system to hold in place if cuts are made all the way through the sheet. Parts that are smaller than the specified area will be placed on a Small Outside Profile layer in the DXF so a separate tool path can be applied to those parts that doesn't cut all the way through the bottom veneer; a process that is often called "onion skinning", which allows the vacuum to more effectively hold smaller parts in place.

CNC Milled Faces

There are construction choices that produce components with dadoes, rabbets or pockets on both sides. Because of the nature of CNC machines, both sides cannot be milled; parts cannot be flipped over and re-aligned. The designer has to choose the preferred side for milling on the CNC. The CNC Milled Faces section provides that ability. The table Appendix A 6 explains the Component Type(s) and Milled Face defaults found in this section. Component Type is a CutList Bridge DXF attribute which is specified by CabWriter for normal cabinet parts. If the user creates a custom part and makes it a CabWriter component using the Make CabWriter Component tool, the Component Type attribute will automatically be set to Custom whenever the Component Type (CP) Custom Part is selected in the Component Type drop down box. See figure Appendix A 5.

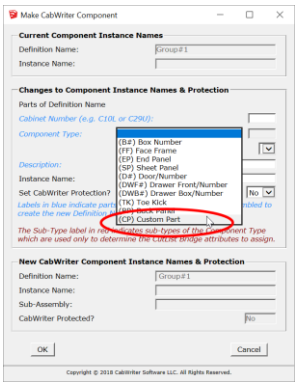

Appendix A 5 Make CabWriter Component Component Type Drop Down

Component Type	Options	Default
Sides	Inside:Outside	Inside
Top/Stretchers	Inside:Outside	Outside
Bottom	Inside:Outside	Outside
Shelf/Fixed Shelf	Top:Bottom	Bottom
Back	Inside:Outside	Outside
Custom	Left:Right:Front:Back:Top:Bottom	Left

Appendix A 6 Component Type Parameters, Options and Defaults

Inside:Outside is determined by a face on the inside of a cabinet's box, or the outside of a cabinet's box.
Left:Right has a red axis normal and Left is the lowest R value and Right the highest R value.
Front:Back has a green axis normal and Back is the lowest G value and Front the highest G value.
Top:Bottom has a blue axis normal and Bottom is the lowest B value and Top the highest B value.

CNC Boring Tab

The parameters contained in the CNC Boring tab apply only if CNC is chosen for Drilling Method in the General section of the Project tab.

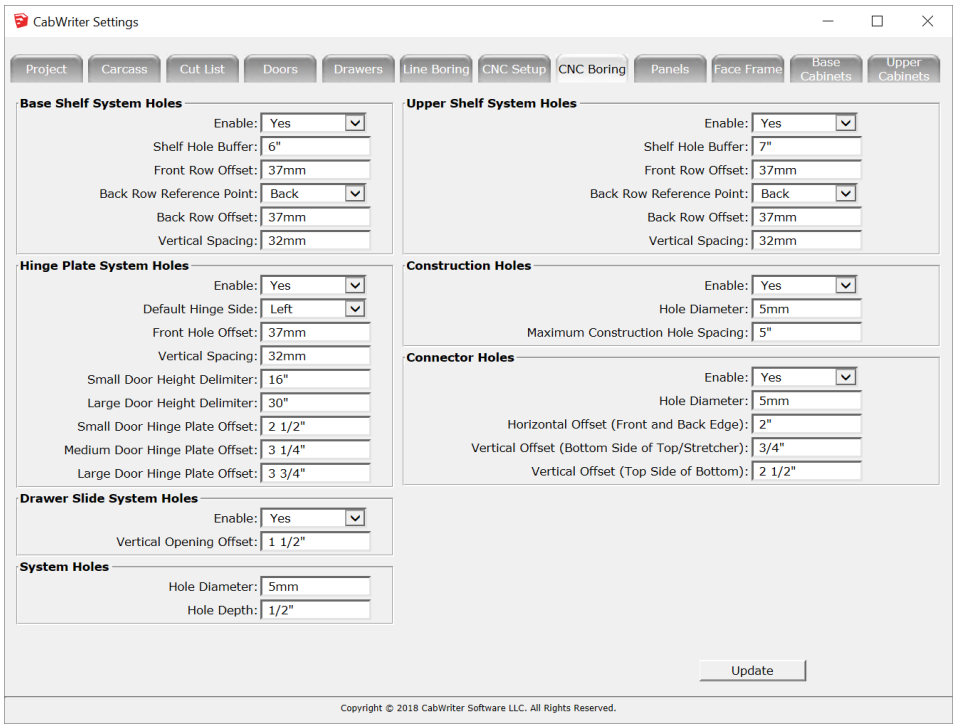

Base Shelf System Holes

Enable

This is a drop down default that offers the user two options: Yes or No.

- Yes – Base shelf holes *will* be drawn.
- No – Base shelf holes *will NOT* be drawn.

Shelf Hole Buffer

Shelf Hole Buffer specifies a minimum distance from the top of the door opening, and from the bottom of the door opening, that no shelf holes will be drawn. Between these two demarcations the shelf holes column is centered.

Front Row Offset
Specifies the distance from the front edge of the carcass sides that the front column of shelf holes is drawn.

Back Row Reference Point
This is a drop down default that offers the user two options: Front and Back.

- Front - Back Row Offset is referenced from the front edge of the carcass sides.
- Back - Back Row Offset is referenced from the front face of the carcass back.

Back Row Offset
Specifies the distance from the Back Row Reference Point that the back column of shelf holes is drawn.

Vertical Spacing
Specifies the center to center spacing of shelf holes.

Hinge Plate System Holes
Enable
This is a drop down default that offers the user two options: Yes or No.

- Yes – Hinge plate holes *will* be drawn.
- No – Hinge plate holes *will NOT* be drawn.

Default Hinge Side
This is a drop down default that offers the user two options: Left or Right.

- Left – If there is only one door specified, the hinges will be place on the left side of the opening.
- Right – If there is only one door specified, the hinges will be place on the Right side of the opening.

If the door opening has a blind or butt stile and only one door specified the hinges are placed on the blind or butt stile side.

Commented [JPZ6]: Need to add code logic for the Wall stile case.

If two doors are specified this default is ignored and hinges are placed on both sides of the opening.

Front Hole Offset
Specifies the distance from the front edge of the carcass side that the front hinge plate holes are drawn.

Vertical Spacing
Specifies the center to center spacing of hinge plate holes.

Small Door Height Delimiter
Doors smaller than Small Door Height Delimiter are considered small doors and the Small Door Hinge Plate Offset applies.

Large Door Height Delimiter
Doors smaller than Large Door Height Delimiter and larger than Small Door Height Delimiter are considered medium doors and the Medium Door Hinge Plate Offset applies.

Doors larger than Large Door Height Delimiter are considered large doors and the Large Door Hinge Plate Offset applies.

Small Door Hinge Plate Offset
Specifies the distance from the top and bottom of the door opening, to the center of the small door hinge plate holes. A hinge plate hole will be drawn above and below this point at ½ the *Vertical Spacing* distance.

Medium Door Hinge Plate Offset
Specifies the distance from the top and bottom of the door opening, to the center of the medium door hinge plate holes. A hinge plate hole will be drawn above and below this point at ½ the *Vertical Spacing* distance.

Large Door Hinge Plate Offset
Specifies the distance from the top and bottom of the door opening, to the center of the large door hinge plate holes. A hinge plate hole will be drawn above and below this point at ½ the *Vertical Spacing* distance.

Drawer Slide System Holes
Enable
This is a drop down default that offers the user two options: Yes or No.

- Yes – Drawer slide holes *will* be drawn.
- No – Drawer slide holes *will NOT* be drawn.

Vertical Opening Offset
Specifies the distance from the bottom of the drawer opening to the center of the drawers slide holes.

Note: The drawer opening should not be confused with the drawer front size; the opening will always be slightly bigger.

System Holes
These defaults apply to all the previous sections of system holes in this CNC Boring Tab.

Hole Diameter
Specifies the diameter of system holes.

Hole Depth
Specifies the depth of system holes.

Upper Shelf System Holes

Enable

This is a drop down default that offers the user two options: Yes or No.

- Yes – Upper shelf holes *will* be drawn.
- No – Upper shelf holes *will NOT* be drawn.

Shelf Hole Buffer

Shelf Hole Buffer specifies a minimum distance from the top of the door opening, and from the bottom of the door opening, that no shelf holes will be drawn. Between these two demarcations the shelf holes column is centered.

Front Row Offset

Specifies the distance from the front edge of the carcass sides that the front column of shelf holes is drawn.

Back Row Reference Point

This is a drop down default that offers the user two options: Front and Back.

- Front –Back Row Offset is referenced from the front edge of the carcass sides.
- Back - when chosen the Back Row Offset is referenced from the front face of the carcass back.

Back Row Offset

Specifies the distance from the Back Row Reference Point that the back column of shelf holes is drawn.

Vertical Spacing

Specifies the center to center spacing of shelf holes.

Construction Holes

Construction holes by definition are drilled all the way through the carcass side and are used as pilot holes for screwing carcass sides to the top and bottom. As such, they are centered ½ the thickness of the carcass top and bottom from the top of the carcass side.

Enable

This is a drop down default that offers the user two options: Yes or No.

- Yes – Construction holes *will* be drawn.
- No – Construction holes *will NOT* be drawn.

Hole Diameter

Specifies the diameter of construction holes.

Maximum Construction Hole Spacing

Specifies the maximum spacing that CabWriter will drawer construction holes.

Connector Holes

Connector holes are used to tie boxes of the same cabinet together. In upper cabinets two connector holes are bored at both the top and bottom. In base cabinets two connector holes are bored at the top and only one on the bottom near the back.

Enable

This is a drop down default that offers the user two options: Yes or No.

- Yes – Connector holes *will* be drawn.
- No – Connector holes *will NOT* be drawn.

Hole Diameter

Specifies the diameter of connector holes.

Horizontal Offset (Front and Back Edge)

Specifies the distance hole centers are offset in the horizontal direction from the front and back edge.

Vertical Offset (Bottom Side of Top/Stretcher)

Specifies the distance top hole centers are offset in the vertical direction from the bottom side of the top (if solid top is chosen) or stretcher (if stretchers are chosen).

Vertical Offset (Top Side of Bottom)

Specifies the distance bottom hole centers are offset in the vertical direction from the top side of the bottom.

Panels Tab

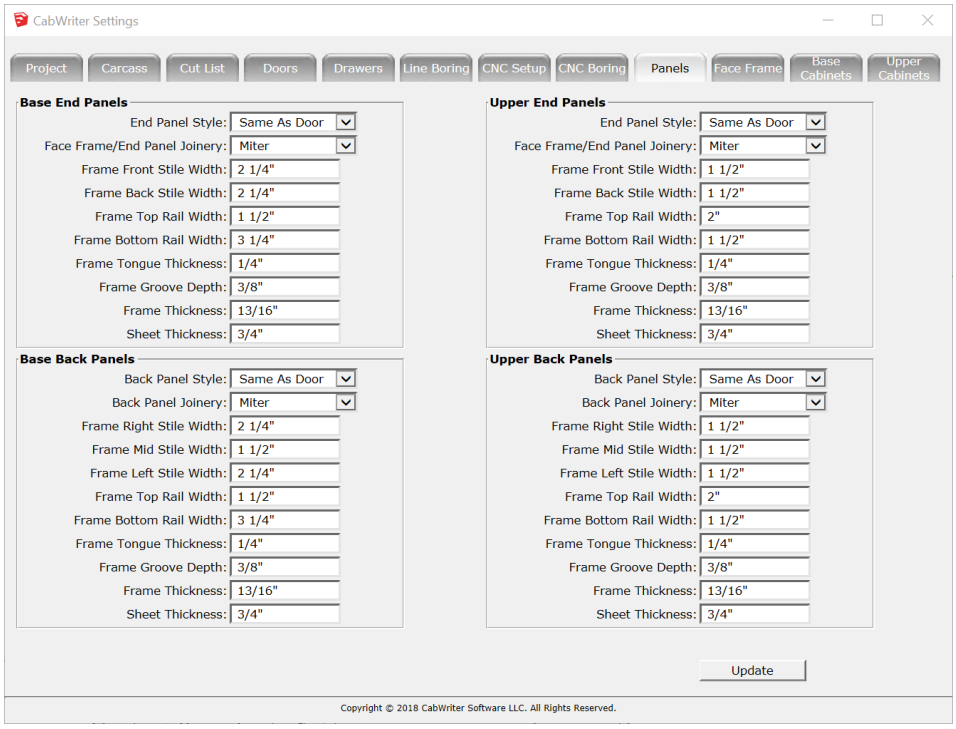

Base End Panels

When 'Width' appears in a default name it implies the cross grain dimension.

End Panel Style

This is a drop down default with two choices: Same As Door and Basic Frame and Panel. When Same As Door is chosen the end panels will be constructed as defined by the Base Doors Style section on the Doors tab. Basic Frame and Panel is simple mortise and tenon construction.

Face Frame/End Panel Joinery

This is a drop down default that offers the user two options: Miter or Butt.

- Miter – End panel's front stile will join to the face frame's end stile with a miter joint.
- Butt – End panel's front stile will join to the face frame's end stile with a butt joint.

Frame Front Stile Width
Specifies the width of the frame's front stile.

Frame Back Stile Width
Specifies the width of the frame's back stile.

Frame Top Rail Width
Specifies the width of the frame's top rail.

Frame Bottom Rail Width
Specifies the width of the frame's bottom rail.

Frame Tongue Thickness
In the case of a simple frame and panel this default is the thickness of the panel and the width of the groove. If the panel is a raised panel this default is the thickness of the edge tongue and the width of the groove.

Frame Groove Depth
Specifies the depth of the groove.

Frame Thickness
Specifies the thickness of the frame's rails and stiles.

Sheet Thickness
If the cabinet's end stile is a Left or Right End Sheet, this default specifies the thickness of the end panel sheet.

Base Back Panels

The Create a Back Panel tool  is normally used to add a panel to the exposed back of a cabinet when it is not against a wall; for example an island or peninsula. This is the use that the following defaults apply to. However, though not usual, the Create a Back Panel tool can be used to create a panel almost anywhere and in those situations it is up to the user to determine how these defaults apply.

When 'Width' appears in a default name it implies the cross grain dimension.

Back Panel Style
This is a drop down default with two choices: Same As Door and Basic Frame and Panel. When Same As Door is chosen the end panels will be constructed as defined by the Base Doors Style section on the Doors tab. Basic Frame and Panel is simple mortise and tenon construction**.**

Back Panel Joinery
This is a drop down default that offers the user two options: Miter or Butt.

- Miter – Back panel's front stile will join to the face frame's end stile with a miter joint.
- Butt – Back panel's front stile will join to the face frame's end stile with a butt joint.

Frame Right Stile Width
Specifies the width of the frame's right stile.

Frame Mid Stile Width
Specifies the width of all the mid stiles in a frame.

Frame Left Stile Width
Specifies the width of the frame's left stile.

Frame Top Rail Width
Specifies the width of the frame's top rail.

Frame Bottom Rail Width
Specifies the width of the frame's bottom rail.

Frame Tongue Thickness
In the case of a simple frame and panel this default is the thickness of the panel and the width of the groove. If the panel is a raised panel this default is the thickness of the edge tongue and the width of the groove.

Frame Groove Depth
Specifies the depth of the groove.

Frame Thickness
Specifies the thickness of the frame's rails and stiles.

Sheet Thickness
If a slab is chosen in the drop down of Back Panel Style or Same As Door is selected and the door style is a slab this default specifies the sheet thickness.

Upper End Panels
When 'Width' appears in a default name it implies the cross grain dimension.

End Panel Style
This is a drop down default with two choices: Same As Door and Basic Frame and Panel. When Same As Door is chosen the end panels will be constructed as defined by the Upper Doors Style section on the Doors tab. Basic Frame and Panel is simple mortise and tenon construction.

Face Frame/End Panel Joinery

This is a drop down default that offers the user two options: Miter or Butt.

- Miter – End panel's front stile will join to the face frame's end stile with a miter joint.
- Butt – End panel's front stile will join to the face frame's end stile with a butt joint.

Frame Front Stile Width

Specifies the width of the frame's front stile.

Frame Back Stile Width

Specifies the width of the frame's back stile.

Frame Top Rail Width

Specifies the width of the frame's top rail.

Frame Bottom Rail Width

Specifies the width of the frame's bottom rail.

Frame Tongue Thickness

In the case of a simple frame and panel this default is the thickness of the panel as well as the width of the groove. If the panel is a raised panel this default is the thickness of the edge tongue and the width of the groove.

Frame Groove Depth

Specifies the depth of the groove.

Frame Thickness

Specifies the thickness of the frame's rails and stiles.

Sheet Thickness

If the cabinet's end stile is a Left or Right End Sheet, this default specifies the thickness of the end panel sheet.

Upper Back Panels

The Create a Back Panel tool  is normally used to add a panel to the exposed back of a cabinet when it is not against a wall; for example an island or peninsula. This is the use that the following defaults apply to. However, though not usual, the Create a Back Panel tool can be used to create a panel almost anywhere and in those situations it is up to the user to determine how these defaults apply.

When 'Width' appears in a default name it implies the cross grain dimension.

Back Panel Style
This is a drop down default with two choices: Same As Door and Basic Frame and Panel. When Same As Door is chosen the end panels will be constructed as defined by the Upper Doors Style section on the Doors tab. Basic Frame and Panel is simple mortise and tenon construction.

Back Panel Joinery
This is a drop down default that offers the user two options: Miter or Butt.

- Miter – Back panel's front stile will join to the face frame's end stile with a miter joint.
- Butt – Back panel's front stile will join to the face frame's end stile with a butt joint.

Frame Right Stile Width
Specifies the width of the frame's right stile.

Frame Mid Stile Width
Specifies the width of all the mid stiles in a frame.

Frame Left Stile Width
Specifies the width of the frame's left stile.

Frame Top Rail Width
Specifies the width of the frame's top rail.

Frame Bottom Rail Width
Specifies the width of the frame's bottom rail.

Frame Tongue Thickness
In the case of a simple frame and panel this default is the thickness of the panel and the width of the groove. If the panel is a raised panel this default is the thickness of the edge tongue and the width of the groove.

Frame Groove Depth
Specifies the depth of the groove.

Frame Thickness
Specifies the thickness of the frame's rails and stiles.

Sheet Thickness
If a slab is chosen in the drop down of Back Panel Style or Same As Door is selected and the door style is a slab this default specifies the sheet thickness.

Face Frame Tab

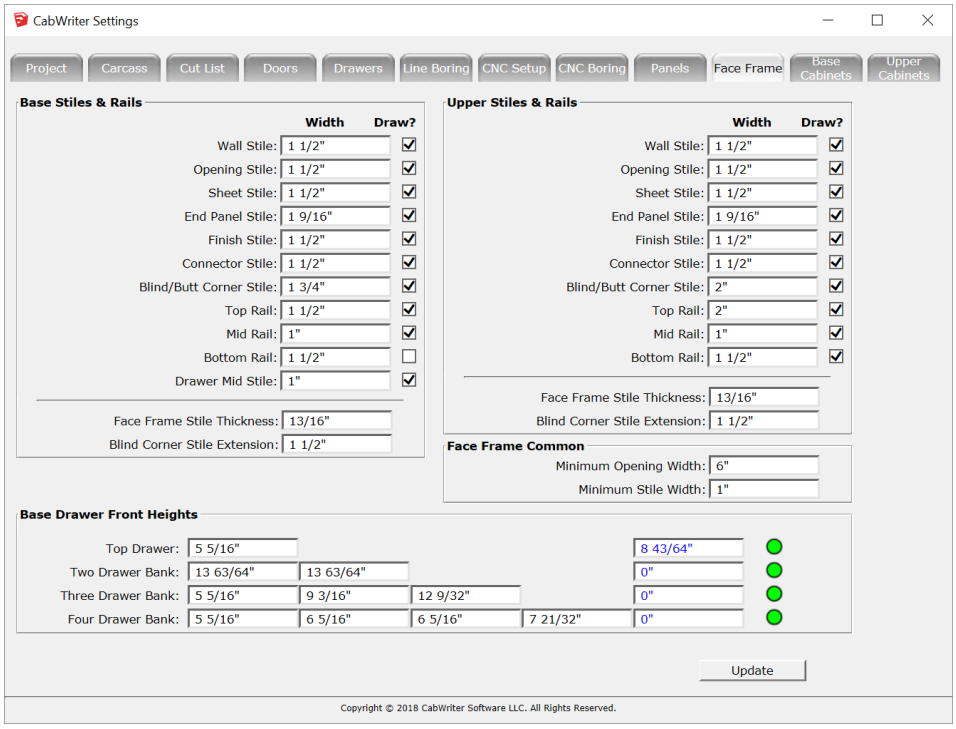

The Face Frame tab permits the user to specify a pure frameless cabinet style, a pure face frame style or any combination of stiles and rails to create a hybrid style. In addition, the Face Frame tab permits the specification of all stile and rail dimensions and base drawer front heights. There are two points the user must keep in mind. Any change to rail dimensions or 'Draw?' check box will require a change in base drawer front heights. Secondly, any change will not take effect until one of three actions take place: the user clicks the Update button, selects another tab or closes the CabWriter Settings dialog box. The latter is not a good practice for this reason; if a change is made to a rail, for example, and the user closes the CabWriter Settings dialog box to register the change there will be no opportunity to see how that change affected the base drawer front heights. Always follow this procedure:

1. Make any desired changes to rails or stiles.
2. Click on the Update button.
3. Check the circular flags to the right of the Base Drawer Front Heights fields.

4. If any line has a red flag the user must adjust the drawer front heights, click the Update button again and repeat this procedure until a green flag is established.

Stiles and rails are enabled or disabled by checking or unchecking the 'Draw?' checkbox next to the name of the component. When enabled, they will be drawn, when disabled, they will not be drawn.

NOTE: If Overlay is chosen for Cabinet Style on the Project tab, all 'Draw?' checkboxes will be checked and the user will not be able to uncheck them.

Base Stiles & Rails

The 'Width' column specifies cross grain width for each rail or stile. The 'Draw?' checkbox will tell CabWriter to draw the particular rail or stile if checked. If not checked the particular rail or stile will not be drawn. See **Error! Reference source not found.** on page **Error! Bookmark not defined.** for the definition of each stile type.

Wall Stile

Specifies the width of a wall stile and whether it is to be drawn.

Opening Stile

Specifies the width of a opening stile and whether it is to be drawn.

Sheet Stile

Specifies the width of a sheet stile and whether it is to be drawn.

End Panel Stile

Specifies the width of a end panel stile and whether it is to be drawn.

Filler Stile

Specifies the width of a filler stile and whether it is to be drawn.

Connector Stile

Specifies the width of a connector stile and whether it is to be drawn.

Blind/Butt Corner Stile

Specifies the width of a blind/butt corner stile and whether it is to be drawn.

Top Rail

Specifies the width of a top rail and whether it is to be drawn.

Mid Rail

Specifies the width of a mid rail and whether it is to be drawn.

Bottom Rail

Specifies the width of a bottom rail and whether it is to be drawn.

Drawer Mid Stile
Specifies the width of a drawer mid stile and whether it is to be drawn.

Face Frame Stile Thickness
Specifies the thickness of the face frame structure.

Blind Corner Stile Extension
Specifies how much the width of a Blind Corner Stile is extended to accommodate the companion Butt Stile. That is, the total width of a Blind Corner Stile is the part that is revealed, defined by Blind/Butt Corner Stile above, plus the non-revealed width defined by Blind Corner Stile Extension.

Upper Stiles & Rails
The 'Width' column specifies cross grain width for each rail or stile. The 'Draw?' checkbox will tell CabWriter to draw the particular rail or stile if checked. If not checked the particular rail or stile will not be drawn. See **Error! Reference source not found.** on page **Error! Bookmark not defined.** for the definition of each stile type.

Wall Stile
Specifies the width of a wall stile and whether it is to be drawn.

Opening Stile
Specifies the width of a opening stile and whether it is to be drawn.

Sheet Stile
Specifies the width of a sheet stile and whether it is to be drawn.

End Panel Stile
Specifies the width of a end panel stile and whether it is to be drawn.

Filler Stile
Specifies the width of a filler stile and whether it is to be drawn.

Connector Stile
Specifies the width of a connector stile and whether it is to be drawn.

Blind/Butt Corner Stile
Specifies the width of a blind/butt corner stile and whether it is to be drawn.

Top Rail
Specifies the width of a top rail and whether it is to be drawn.

Mid Rail
Specifies the width of a mid rail and whether it is to be drawn.

Bottom Rail
Specifies the width of a bottom rail and whether it is to be drawn.

Face Frame Stile Thickness
Specifies the thickness of the face frame structure.

Blind Corner Stile Extension
Specifies how much the width of a Blind Corner Stile is extended to accommodate the companion Butt Stile. That is, the total width of a Blind Corner Stile is the part that is revealed, defined by Blind/Butt Corner Stile above, plus the non-revealed width defined by Blind Corner Stile Extension.

Face Frame Common
Minimum Opening Width
Specifies the minimum door or drawer opening width. The user will get a warning message but CabWriter will attempt to draw the cabinet anyway.

Minimum Stile Width
Specifies the minimum width of a stile.

Base Drawer Front Heights
Base Drawer Front Heights are the actual height of the drawn drawer front. It is not the height of the drawer opening.

In each of the row selections below the fifth column is the difference column. When the drawer heights are added up including the required rail widths and clearances, such as door and drawer gaps, this total is compared to the total carcass height. If the total is larger than the carcass height a red flag is set and a negative number appears in the fifth column. If the total is less than the carcass height, a red flag is set and a positive number appears in the fifth column. If the flag is red the user must adjust the applicable drawer front heights to obtain a green flag. See **Error! Reference source not found.** on page **Error! Bookmark not defined.** for the procedure to follow.

Top Drawer
This default specifies the drawer front height of a single or combo drawer, for example in a Standard Base w/Drawer. Up to half of the total opening is allotted to the top drawer height reserving at least half of the opening to the door(s). For this reason, when the flag is green you will still see a positive number in the fifth column, the difference column.

Two Drawer Bank
When a Drawer Bank Base is chosen with two drawers the first field specifies the top drawer front height and the second field specifies the bottom drawer front height.

Three Drawer Bank

When a Drawer Bank Base is chosen with three drawers the first field specifies the top drawer front height, the second field specifies the middle drawer front height and the third field specifies the bottom drawer front height.

Four Drawer Bank

When a Drawer Bank Base is chosen with four drawers the first field specifies the top drawer front height, the second field specifies the second drawer front height, the third field specifies the third drawer front height, and the fourth field specifies the bottom drawer front height.

Base Cabinets Tab

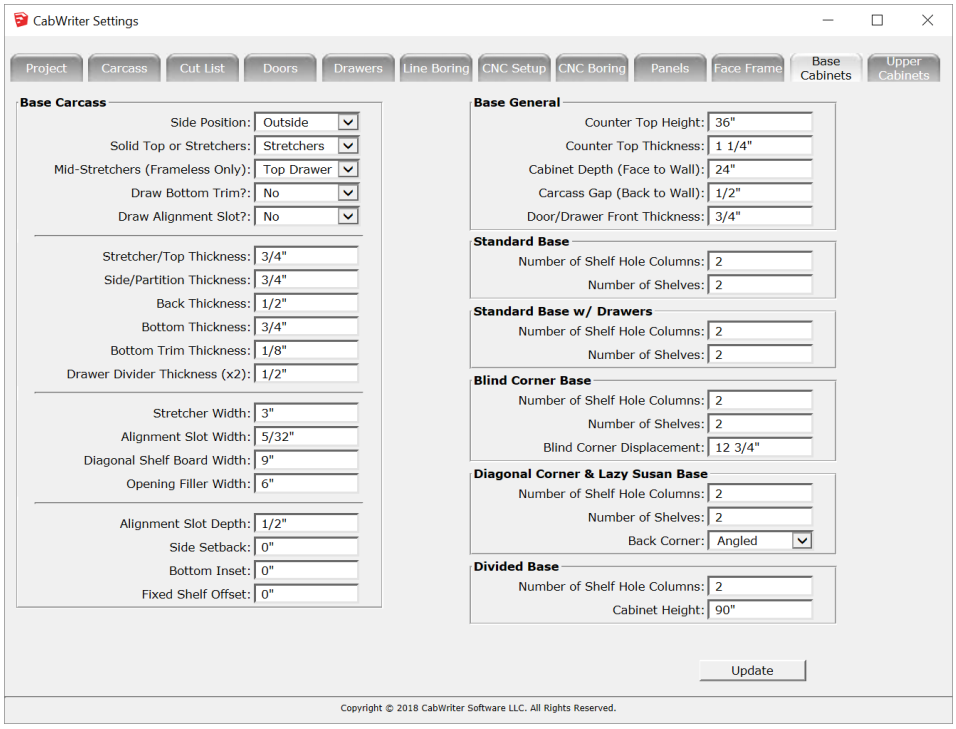

Base Carcass

Side Position

Side Position is a drop down default with two choices: Outside and Captured.

- Outside - When selected, Outside produces a cabinet structure where the top/stretchers and bottom are enclosed by the sides.
- Captured - Captured is just the opposite: sides are enclosed by the top/stretchers and bottom. The advantage of Captured is primarily that cabinet length will not vary with slight changes in plywood thickness because the width of the boxes are determined by the top/stretcher and bottom length.

Figure Appendix A 7 shows examples of Outside and Captured construction. Note not only the top/stretchers, sides and bottom positions, but also the difference in where the construction holes are drilled.

NOTE: these parameters have no effect on the Diagonal Corner boxes, Lazy Susan boxes or Refrigerator boxes.

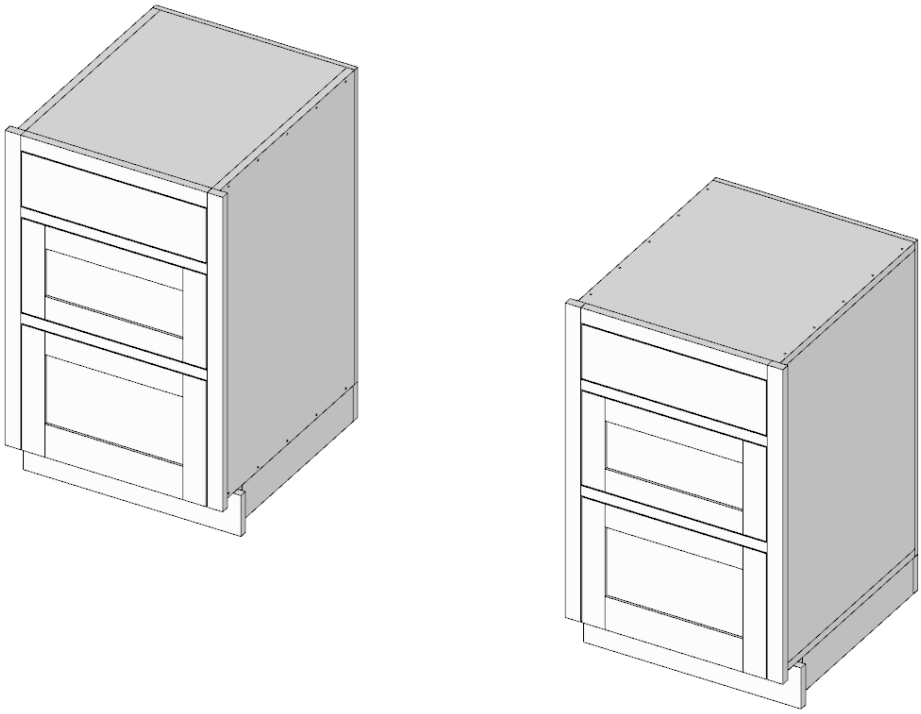

Appendix A 7 Examples of Outside (Left) and Captured (Right) Cabinet Construction

Solid Top or Stretchers

This is a drop down default that offers the user two options: Stretchers or Solid.

- Stretchers – Carcass top is drawn as two stretchers: one in the back and one in the front. This is typical of base cabinets which will have a counter top above.
- Solid – Carcass top is drawn as a solid sheet.

Mid-Stretchers (Frameless Only)

This default applies to Frameless Cabinet Style only (see the General section, Cabinet Style drop down on the Project tab). This is a drop down default that offers the user three options: Top Drawer, All Drawers or None.

- Top Drawer – A single mid-stretcher will be drawn below the top drawer only.
- All Drawers – Mid-stretchers will be drawn below all drawers except the bottom drawer.
- None – Mid-stretchers *will NOT* be drawn below any drawers.

Draw Bottom Trim?

This is a drop down default that offers the user two options: Yes or No.

- Yes – A trim piece, typically solid wood, *will* be added to the carcass bottom's front edge.
- No – A trim piece *will NOT* be added to the carcass bottom's front edge.

Draw Alignment Slot?

This is a drop down default that offers the user two options: Yes or No.

- Yes – An alignment slot *will* be drawn centered in the front edge of each carcass side.
- No – An alignment slot *will NOT* be drawn in the carcass sides.

Stretcher/Top Thickness

Specifies the thickness of the carcass top or stretchers, depending on which is chosen for the Solid Top or Stretchers default.

Side/Partition Thickness

Specifies the thickness of a carcass side or partition.

Back Thickness

Specifies the thickness of carcass back.

Bottom Thickness

Specifies the thickness of the carcass bottom.

Bottom Trim Thickness

Specifies the thickness of the bottom trim. See default Draw Bottom Trim? above.

Drawer Divider Thickness (x2)

Specifies the thickness of the dividers between combo drawers. There are two dividers drawn, each with a thickness of Drawer Divider Thickness. If, for example, only a single divider was needed; say ¾" thick, simply enter 3/8" for this parameter, delete one of the dividers, and pull the other out to ¾" using the native SketchUp Push/Pull command. To prevent CabWriter from putting two dividers back when a cabinet is re-drawn, simply check the CabWriter Protected box in the Extended Entity Info window for the modified divider. The deleted divider will be added back but the modified one will not be changed. Simply delete the narrow divider again.

Stretcher Width

Specifies the width of the box's top stretchers. The width direction is from front to back.

Alignment Slot Width

Specifies the width of the alignment slot. See default Draw Alignment Slot? above. The width direction of the alignment slot is the thickness direction of the box sides.

Diagonal Shelf Board Width

Specifies the width of the Shelf Support used in Diagonal Corner cabinet and Lazy Susan cabinets. See figure Appendix A 8 for the 9" dimension that this default specifies.

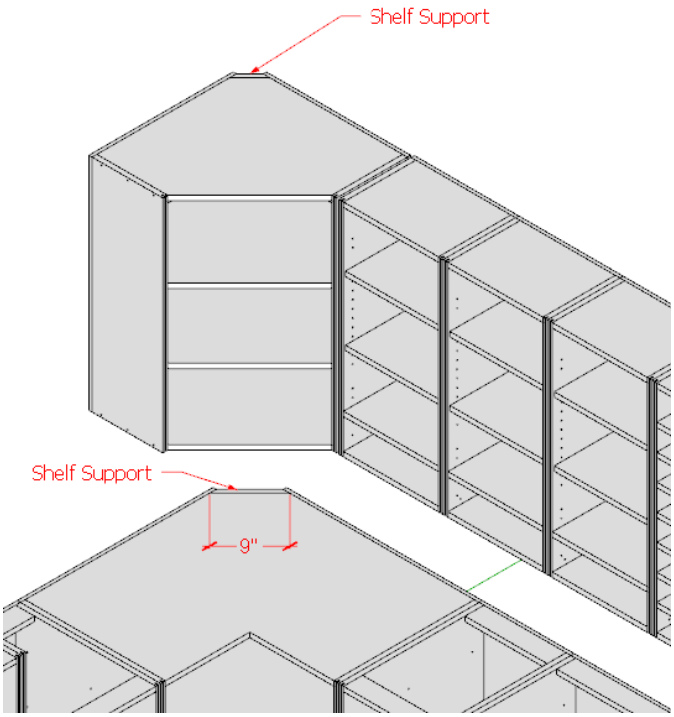

Appendix A 8 The Diagonal Shelf Board Width default which specifies the width of the Shelf Support in corner cabinets.

Opening Filler Width

Specifies the width of the filler board used behind an End Opening stile. See example in figure Appendix A 9.

Alignment Slot Depth

Specifies the depth of an alignment slot. See default Draw Alignment Slot? above.

Side Setback

Specifies the amount a carcass side is set back from the inside edge of an end or connector stile. This default only applies where stiles are drawn. Typically the value of Side Setback is 0" because the typical width of a side is ½ the width of a stile.

Bottom Inset

Specifies the distance a carcass' bottom and sides are inset from the bottom of the face frame; either the bottom edge of the stiles if no bottom rail is specified, or the bottom edge of the bottom rail. For example, if the bottom rail is 1 ½" wide and the carcass bottom is ¾" thick, a Bottom Inset of ¾" would make the top of the carcass bottom flush with the top of the bottom rail. A Bottom Inset of zero would make the bottom of the carcass bottom flush with the bottom of the rail.

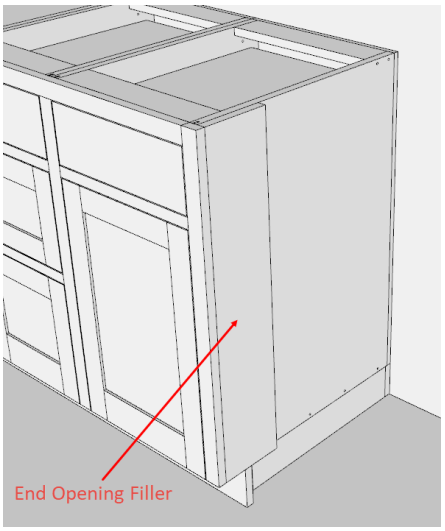

Appendix A 9 End Opening Filler

Fixed Shelf Offset

This default applies to both the Divided Base and the Divided Upper cabinets. It specifies an offset distance for fixed shelves above a mid-rail. Though this default specifies a default parameter it can be over-ridden in the Box Selector or Modify Box Selector dialog boxes when defining a cabinet with the Story Stick or editing a cabinet with Edit Cabinet respectively.

Commented [JPZ7]: This default should be eliminated altogether or separate defaults should be defined for the Base and Upper Divided cabinets.

A Fixed Shelf Offset value of 0" would mean that the bottom face of the mid-rail would be even with the bottom face of the fixed shelf. Consider a case where mid-rail thickness is 1", fixed shelf thickness is ¾" and Fixed Shelf Offset is specified as 5/8". This would result in the fixed shelf sticking above the mid-rail by 3/8"

Base General

Counter Top Height

Specifies the height of the counter top.

Counter Top Thickness
Specifies the thickness of the counter top.

Cabinet Depth (Face to Wall)
Specifies the depth of the cabinet measured from the face of the face frame in the case of Face Frame or Overlay Cabinet Style, or the face of the doors/drawers in the case of Frameless Cabinet Style.

Carcass Gap (Back to Wall)
Specifies the carcass gap; that is the gap between the back side face of the back and the wall. This gap is usually provided to account for variation in the wall planarity and scribing of end panels.

Door/Drawer Front Thickness
Specifies the thickness of the door and drawer fronts. This is the frame thickness in the case of frame and panel and sheet thickness in the case of slab fronts.

Standard Base
Number of Shelf Hole Columns
Specifies the number of shelf hole columns; 0, 1, 2 or 3 are valid inputs.

Number of Shelves
Specifies the default number of adjustable shelves.

Standard Base w/ Drawers
Number of Shelf Hole Columns
Specifies the number of shelf hole columns; 0, 1, 2 or 3 are valid inputs.

Number of Shelves
Specifies the default number of adjustable shelves.

Blind Corner Base
Number of Shelf Hole Columns
Specifies the number of shelf hole columns; 0, 1, 2 or 3 are valid inputs.

Number of Shelves
Specifies the default number of adjustable shelves.

Blind Corner Displacement
Specifies the distance the blind corner cabinet recesses into the corner. In other word the carcass' blind side is moved into the blind corner a distance of Blind Corner Displacement. See Appendix A 10 Blind Corner Displacement.

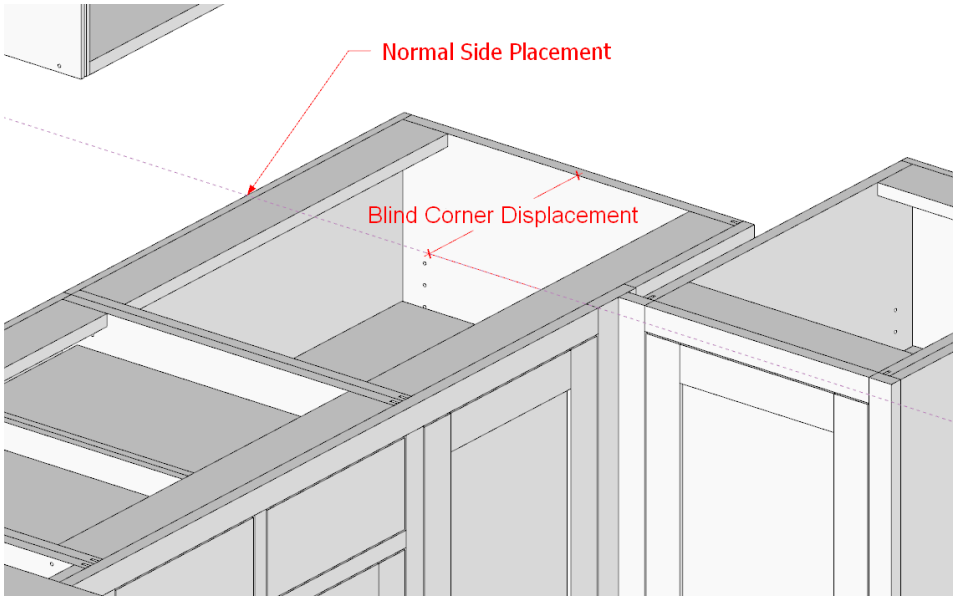

Appendix A 10 Blind Corner Displacement

Diagonal Corner & Lazy Susan Base

Number of Shelf Hole Columns

Specifies the number of shelf hole columns; 0, 1, 2 or 3 are valid inputs.

Number of Shelves

Specifies the default number of adjustable shelves.

Back Corner

This is a drop down default that offers the user two options: Angled and Squared. These defaults determine whether the back corner is constructed at a 45 degree angle or square.

- Angled - When angled is selected the back corner is drawn at an angle of 45°.
- Squared - When Squared is selected for the Back Corner the angled Shelf Support is not drawn and the Shelf Support shelf holes are consequently not drawn. In their place shelf holes are drawn in the Left and Right Back. See examples below.

Divided Base

Number of Shelf Hole Columns

Specifies the number of shelf hole columns; 0, 1, 2 or 3 are valid inputs.

Cabinet Height

Specifies the height of the divided base cabinet.

Upper Cabinets

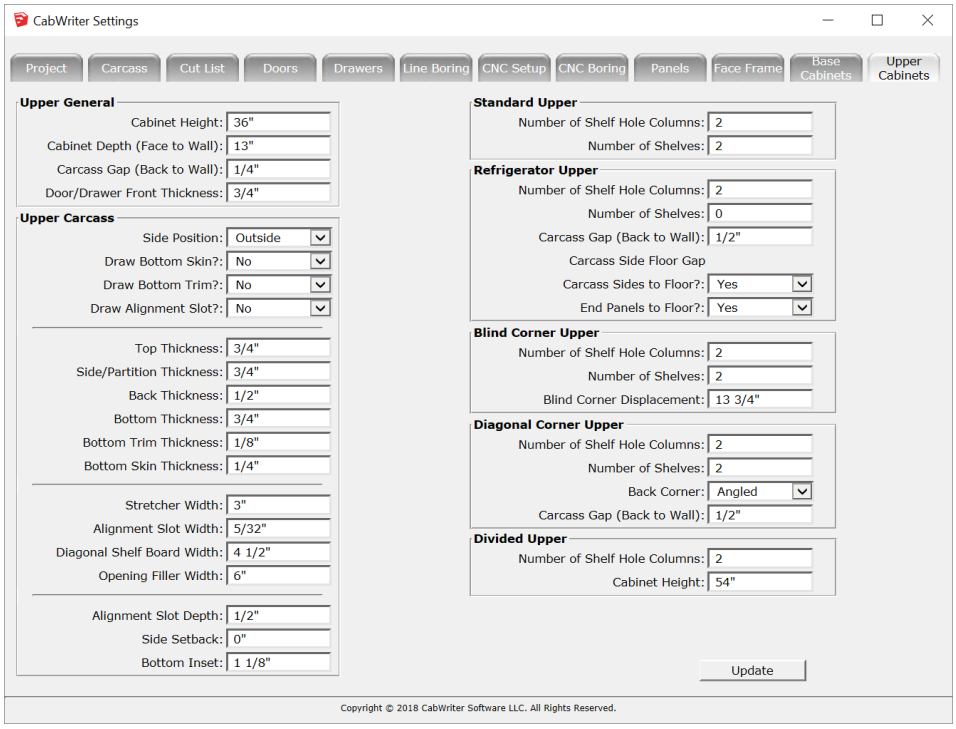

Upper General

Cabinet Height

Specifies the height of the upper cabinets; from the bottom of the face frame rail to the top of the upper face frame rail in the case of a face frame cabinet, or the length of the carcass side in the case of a frameless cabinet.

Cabinet Depth (Face to Wall)

Specifies the depth of the cabinet measured from the face of the face frame in the case of Face Frame or Overlay Cabinet Style, or the face of the doors/drawers in the case of Frameless Cabinet Style.

Carcass Gap (Back to Wall)

Specifies the carcass gap; that is the gap between the back side face of the back and the wall. This gap is usually provided to account for variation in the wall planarity and scribing of end panels.

Door/Drawer Front Thickness

Specifies the thickness of the door and drawer fronts. This is the frame thickness in the case of frame and panel and sheet thickness in the case of slab fronts.

Upper Carcass

Side Position

Side Position is a drop down default with two choices: Outside and Captured.

- Outside - When selected, Outside produces a cabinet structure where the top/stretchers and bottom are enclosed by the sides.
- Captured - Captured is just the opposite: sides are enclosed by the top/stretchers and bottom. The advantage of Captured is primarily that cabinet length will not vary with slight changes in plywood thickness because the width of the boxes are determined by the top/stretcher and bottom length.

Figure Appendix A 7 shows examples of Outside and Captured construction. Note not only the top/stretchers, sides and bottom positions, but also the difference in where the construction holes are drilled.

NOTE: these parameters have no effect on the Diagonal Corner boxes, Lazy Susan boxes or Refrigerator boxes.

Draw Bottom Skin?

This is a drop down default that offers the user two options: Yes or No.

- Yes – Bottom skin *will* be drawn. This default choice is not yet implemented and is therefore not selectable.
- No – Bottom skin *will NOT* be drawn.

Draw Bottom Trim?

This is a drop down default that offers the user two options: Yes or No.

- Yes – A trim piece, typically solid wood, *will* be added to the carcass bottom's front edge.
- No – A trim piece *will NOT* be added to the carcass bottom's front edge.

Draw Alignment Slot?

This is a drop down default that offers the user two options: Yes or No.

- Yes – An alignment slot *will* be drawn centered in the front edge of each carcass side.
- No – An alignment slot *will NOT* be drawn in the front edge of the carcass sides.

Top Thickness

Specifies the thickness of the carcass top.

Side/Partition Thickness
Specifies the thickness of the carcass side or partition.

Back Thickness
Specifies the thickness of the carcass back.

Bottom Thickness
Specifies the thickness of the carcass bottom.

Bottom Trim Thickness
Specifies the thickness of the bottom trim. See default Draw Bottom Trim? above.

Bottom Skin Thickness
Specifies the thickness of the applied bottom skin. See default Draw Bottom Skin? above.

Stretcher Width
Specifies the width of the divided upper cabinet's mid stretchers. The width direction is from front to back.

Alignment Slot Width
Specifies the width of the alignment slot. See default Draw Alignment Slot? above. The width direction of the alignment slot is the thickness direction of the carcass sides.

Diagonal Shelf Board Width
Specifies the width of the Shelf Support used in Diagonal Corner cabinets. See Appendix A 8.

Opening Filler Width
Specifies the width of the filler board used behind an End Opening stile. The End Opening Stile is very rarely used in upper cabinets. See Appendix A 9 .

Commented [JPZ8]: Is this ever used?

Alignment Slot Depth
Specifies the depth of an alignment slot. See default Draw Alignment Slot? above.

Side Setback
Specifies the amount a carcass side is set back from the inside edge of an end or connector stile. This default only applies where stiles are drawn. Typically the value of Side Setback is 0" because the typical width of a side is ½ the width of a stile.

Bottom Inset
Specifies the distance the carcass bottom and sides are inset from the bottom of the face frame; either the bottom edge of the stiles if no bottom rail is specified, or the bottom edge of the bottom rail. For example, if the bottom rail is 1 ½" wide and the carcass bottom is ¾" thick, a Bottom Inset of ¾" would

make the top of the carcass bottom flush with the top of the bottom rail. A Bottom Inset of zero would make the bottom of the carcass bottom flush with the bottom of the rail.

Standard Upper

Number of Shelf Hole Columns

Specifies the number of shelf hole columns; 0, 1, 2 or 3 are valid inputs.

Number of Shelves

Specifies the default number of adjustable shelves.

Refrigerator Upper

Number of Shelf Hole Columns

Specifies the number of shelf hole columns; 0, 1, 2 or 3 are valid inputs.

Number of Shelves

Specifies the default number of adjustable shelves.

Carcass Side Floor Gap

This default is not yet implemented.

Carcass Side to Floor?

This is a drop down default that offers the user two options: Yes or No.

- Yes – Carcass sides of the Refrigerator Upper *will* be drawn all the way to the floor.
- No – Carcass sides of the Refrigerator Upper *will NOT* be drawn all the way to the floor. They will be drawn to the bottom of the face frame; or inset from the bottom of the face frame if default Bottom Inset is non-zero.

End Panels to Floor?

This is a drop down default that offers the user two options: Yes or No.

- Yes – The end panels of the Refrigerator Upper *will* be drawn all the way to the floor.
- No – The end panels of the Refrigerator Upper *will NOT* be drawn all the way to the floor. They will be drawn to the bottom of the face frame.

Blind Corner Upper

Number of Shelf Hole Columns

Specifies the number of shelf hole columns; 0, 1, 2 or 3 are valid inputs.

Number of Shelves

Specifies the default number of adjustable shelves.

Blind Corner Displacement

Specifies the distance the blind corner cabinet recesses into the corner. In other word the carcass' blind side is moved into the blind corner a distance of Blind Corner Displacement. See Appendix A 10 Blind Corner Displacement.

Diagonal Corner Upper

Number of Shelf Hole Columns

Specifies the number of shelf hole columns; 0, 1, 2 or 3 are valid inputs.

Number of Shelves

Specifies the default number of adjustable shelves.

Back Corner

This is a drop down default that offers the user two options: Angled and Squared. These defaults determine whether the back corner is constructed at a 45 degree angle or square.

- Angled - When angled is selected the back corner is drawn at an angle of 45°.
- Squared - When Squared is selected for the Back Corner the angled Shelf Support is not drawn and the Shelf Support shelf holes are consequently not drawn. In their place shelf holes are drawn in the Left and Right Back. See examples below.

Carcass Gap (Back to Wall)

Specifies the carcass gap; that is the gap between the back side face of the carcass back and the wall. This gap is usually provided to account for variation in the wall planarity and scribing of end panels.

Divided Upper

Number of Shelf Hole Columns

Specifies the number of shelf hole columns; 0, 1, 2 or 3 are valid inputs.

Cabinet Height

Specifies the height of the divided upper cabinet.